# Operating Manual

## MH Koltek Valve

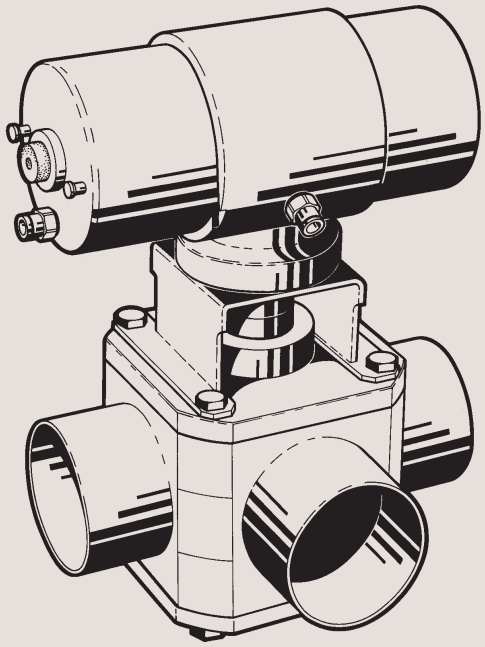

IM70735-GB4 1998-05

# Declaration of Conformity

## The designating company

**Alfa Laval**
Company Name

**6000 Kolding**
Address

**+45 79 32 22 00**
Phone No.

hereby declare that

| **Koltek Valve** | **MH** | |
|---|---|---|
| Denomination | Type | Year |

**Was manufactured in conformity with the provisions in the COUNCIL DIRECTIVE on mutual approximation of the laws of the Member States on the safety of machines (98/37/EC) with special reference to Annex 1 of the directive on essential safety and health requirements in relation to the construction and manufacture of machines.**

| **Bjarne Søndergaard** | **Vice President, R & D** |
|---|---|
| Name | Title |
| **Alfa Laval** | B. Søndergaard |
| Company | Signature |

## Designation

CE

# Table of contents



*This manual is divided into main sections. - See below.*


## Safety

1. Important information ..... 2
2. Warning signs ..... 2
3. Safety precautions ..... 3

## Installation

1. Unpacking/Delivery ..... 4
2. General installation ..... 5
3. Welding ..... 6

## Operation

1. Operation ..... 7
2. Fault finding ..... 8
3. Recommended cleaning ..... 9

## Maintenance

1. General maintenance ..... 10
2. Dismantling of valve ..... 12
3. Reassembly of valve ..... 13
4. Dismantling of actuator
   - type 631/632 ..... 15
   - type 630 ..... 16
   - type 633 ..... 17
5. Reassembly of actuator
   - type 631/632 ..... 18
   - type 630 ..... 19
   - type 633 ..... 20
6. Dismantling/reassembly of special indication units ..... 21
7. Shutter adjustment ..... 22

## Technical data

1. Technical data ..... 23

## Drawings/Parts list

1. Parts lists
   - Valve ..... 24+26
   - Actuator type 631/632 ..... 28+30
   - Actuator type 630 ..... 32+34
   - Actuator type 633 ..... 36+38
2. Exploded drawings
   - Valve ..... 25
   - Actuator type 631/632 ..... 29
   - Actuator type 630 ..... 33
   - Actuator type 633 ..... 37
3. Drawings
   - Valve ..... 27
   - Actuator type 631/632 ..... 31
   - Actuator type 630 ..... 35
   - Actuator type 633 ..... 39

## Appendix

Spare parts

*Unsafe practices and other important information are emphasized in this manual.*

*Warnings are emphasized by means of special signs.*

## 1. Important information

**Always read the manual before using the valve!**

**WARNING!** : Indicates that special procedures **must** be followed to avoid severe personal injury.

**CAUTION!** : Indicates that special procedures **must** be followed to avoid damage to the valve.

**NOTE!** : Indicates important information to simplify practices or to make them clearer.

## 2. Warning signs

: General warning.

: Caustic agents.

*All warnings in the manual are summarized on this page.*

*Pay special attention to the instructions below so that severe personal injury and/or damage to the valve are avoided.*

## 3. Safety precautions

### Installation:

: - **Always** read the technical data thoroughly (see page 23).
- **Always** release compressed air after use.

: **Never** touch the valve or the pipelines when processing hot liquids or when sterilizing.

: **Never** dismantle the valve with valve and pipelines under pressure.

### Operation:

: - **Always** read the technical data thoroughly (see page 23).
- **Always** release compressed air after use.

: **Never** touch the valve or the pipelines when processing hot liquids or when sterilizing.

: **Always** handle lye and acid with great care.

### Maintenance:

: - **Always** read the technical data thoroughly (see page 23).
- **Always** release compressed air after use.

: - **Never** service the valve when it is hot.
- **Never** service the valve with valve and pipelines under pressure.

: **Never** stick your fingers through the valve ports if the actuator is supplied with compressed air.

# Installation

*Study the instructions carefully and pay special attention to the warnings!*

*The valve has ends for welding as standard but can also be supplied with fittings.*

## 1. Unpacking/Delivery

**1**

**CAUTION!**
The valve is delivered with shutter loosened. Always adjust shutter before installing and operating the valve (see special instructions on page 22)!

- **Always** read the technical data thoroughly (see page 23).
- **Always** release compressed air after use.

**CAUTION!**
We cannot be held responsible for incorrect unpacking.

**2**

**Check the delivery for:**
1. Complete valve.
2. Delivery note.
3. Instruction Manual.

**3**

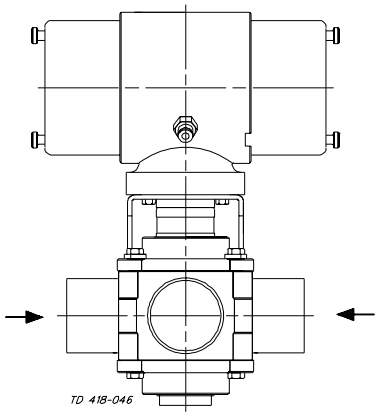


Remove possible packing materials from valve/ valve ports.

**4**

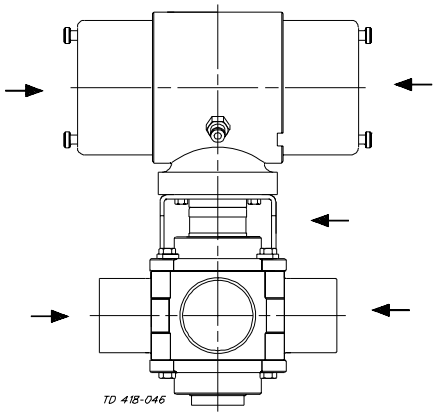


Inspect the valve for visible transport damages.

**5**

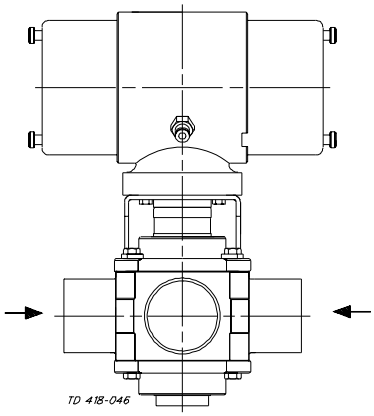


Avoid damaging the valve/valve ports.

*Study the instructions carefully and pay special attention to the warnings!*

*The valve has ends for welding as standard but can also be supplied with fittings.*
*A/A = Air/air activated.*

## 2. General installation

**1**

- **Always** read the technical data thoroughly (see page 23).
- **Always** release compressed air after use.

**CAUTION!**
We cannot be held responsible for incorrect installation.

**2**

**Risk of damage!**

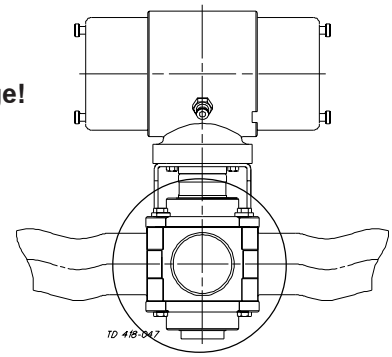


Avoid stressing the valve
Pay special attention to:
- Vibrations.
- Thermal expansion of the tubes.
- Exessive welding.
- Overloading of the pipelines.

**3**

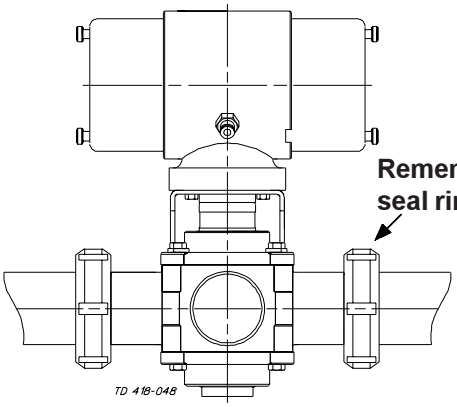


**Fittings:**
Ensure that the connections are tight.

**4**

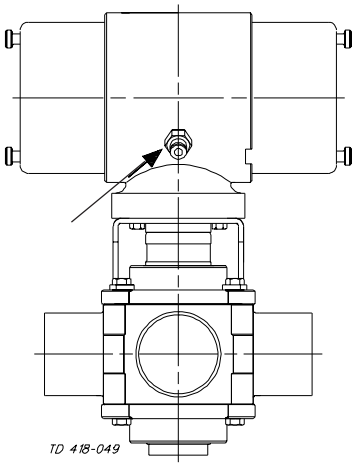


**Air connection:**
R 1/8" (BSP), 6/4 mm hose.

*Study the instructions carefully and pay special attention to the warnings!*
*The valve has welding ends as standard.*

*Weld carefully.*
*Adjust shutter before operating the valve.*
*Check the valve for smooth operation after welding.*

## 3. Welding

**1**

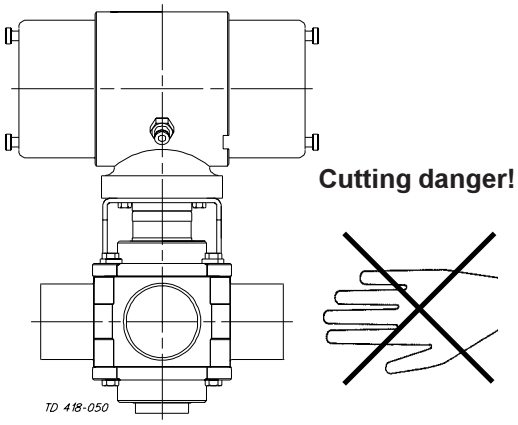


**Never** stick your fingers through the valve ports if the actuator is supplied with compressed air.

**2**

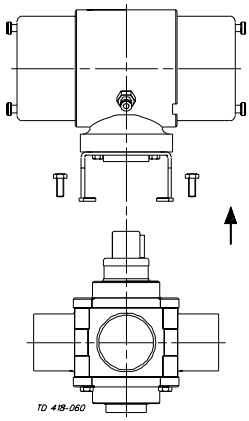


Dismantle the valve in accordance with instructions on page 12.
**Pay special attention to the warnings!**

**3**

Maintain the minimum clearances (A, B and C) so that the actuator and internal valve parts can be removed.

| Valve size | A | B | C |
|---|---|---|---|
| 25 mm/DN25 | 144 | 142 | 214 |
| 38 mm/DN40 | 193 | 186 | 263 |
| 51 mm/DN50 | 209 | 202 | 279 |
| 63.5 mm/DN65 | 234 | 230 | 304 |
| 76.1 mm/DN65 welded | 264 | 265 | 334 |
| DN80 | 325 | 343 | 395 |
| 101.6 mm/DN100 | 355 | 373 | 425 |

**4**

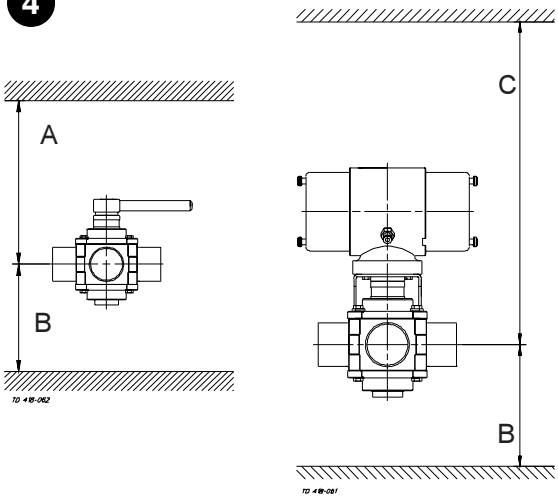


**5**

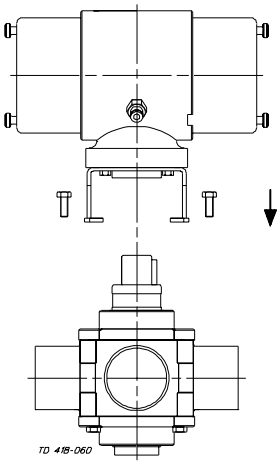


Reassemble the valve in accordance with instructions on page 13 after welding.
**Pay special attention to the warnings!**

**6**

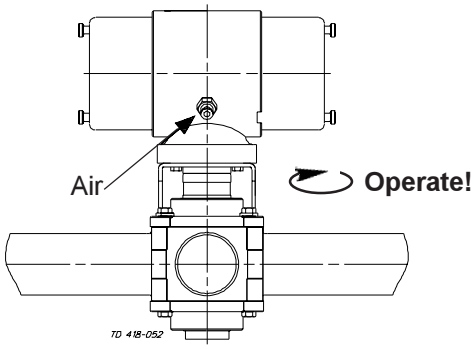


**CAUTION!**
Adjust shutter before operating the valve!
**Pre-use check:**
1. Supply compressed air to the air fitting(s).
2. Operate the valve to ensure that it runs smoothly (see checkpoints on page 14).

**Pay special attention to the warnings!**

*Study the instructions carefully and pay special attention to the warnings!*

*Ensure that the valve operates smoothly.*

## 1. Operation

**1**

- **Always** read the technical data thoroughly (see page 23).
- **Always** release compressed air after use.

**CAUTION!**
We cannot be held responsible for incorrect operation.

**2**

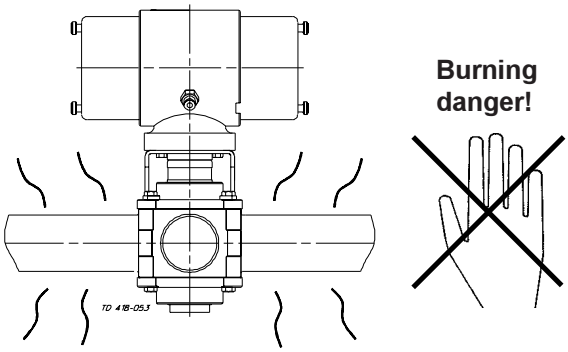


**Never** touch the valve or the pipelines when processing hot liquids or when sterilizing.

**3**

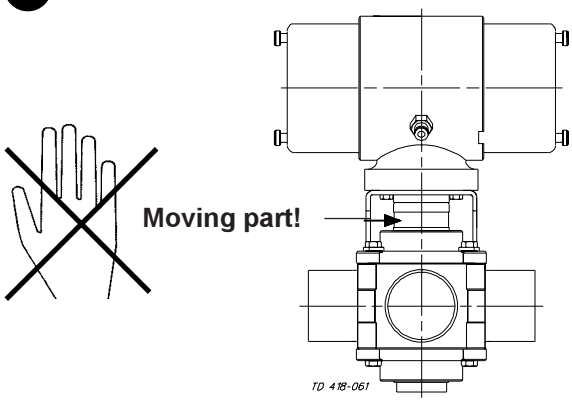


**Never** touch the spindle if the actuator is supplied with compressed air.

**4**

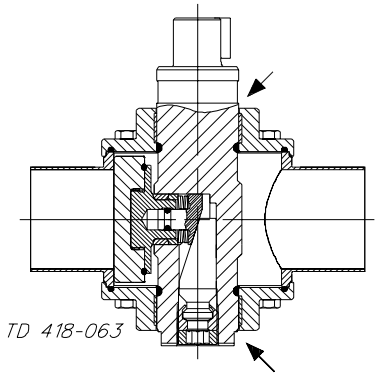


**Lubrication of valve:**

1. Ensure smooth movement of the valve (the valve is lubricated before delivery).
2. Lubricate with silicone oil/grease if necessary.

**5**

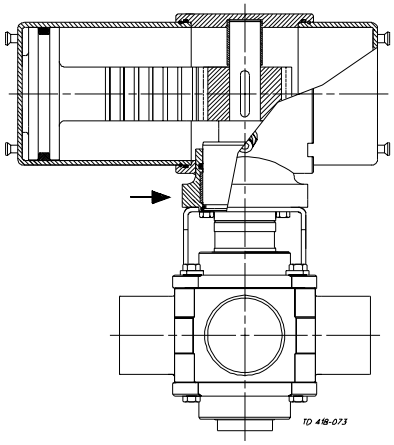


**Lubrication of actuator:**

1. Ensure smooth movement of the actuator (the actuator is lubricated before delivery).
2. Lubricate with silicone oil/grease if necessary.

*Pay attention to possible faults.*

*Study the instructions carefully.*
*The items refer to the drawings and parts list on pages 24-27.*

## 2. Fault finding

**NOTE!**
Study the maintenance instructions carefully before replacing worn parts. - See page 10!



| Problem | Cause/result | Repair |
|---|---|---|
| The shutter jerks | - The shutter needs adjustment<br>- Worn shutter<br>- Compressed cup springs | - Adjust the shutter (see page 22)<br>- Replace the shutter<br>- Replace cup springs |
| Product leakage at valve body/lids | - Worn/product affected O-rings (3)<br>- Loose screws (1) | - Replace the O-rings<br>- Tighten screws |
| Product leakage at lids/shaft | Worn/product affected O-rings (4) | Replace the O-rings |
| Product leakage shutter/tightened device | The shutter needs adjustment | Adjust the shutter<br>NB! Clean inner parts |
| Product leakage (too high pressure against shutter) | - Too high pressure - the shutter needs adjustment<br>- Worn shutter | - Adjust the shutter - change flow direction (see page 22)<br>- Replace the shutter |
| The valve does not open/close | - Faulty wedge (10)<br>- The pressure on the shutter is too high<br>- Worn actuator O-rings<br>- Worn bearing<br>- Shutter adjusted too hard | - Replace the wedge<br>- Reduce the pressure<br>- Replace O-rings<br>- Replace bearing<br>- Adjust shutter |

*Study the instructions carefully and pay special attention to the warnings!*

*NaOH = Caustic Soda.*
*$HNO_3$ = Nitric acid.*

## 3. Recommended cleaning

**1** **Caustic danger!**

**Always** use rubber gloves!

**Always** use protective goggles!

**Always** handle lye and acid with great care.

**2**

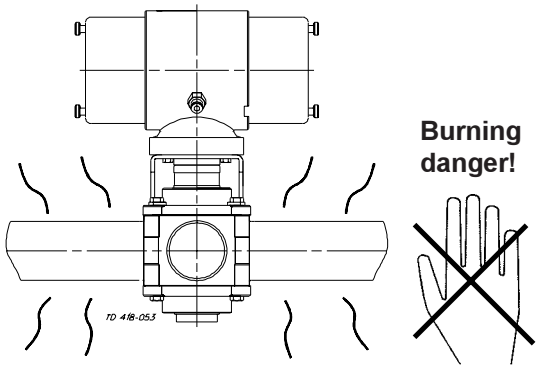


**Never** touch the valve or the pipelines when sterilizing.

**3**

**Examples of cleaning agents:**
Use clean water, free from chlorides.

1. 1% by weight NaOH at 70° C.

| | | | |
|---|---|---|---|
| 1 kg NaOH | + | 100 l water | = Cleaning agent. |
| 2.2 l 33% NaOH | + | 100 l water | = Cleaning agent. |

2. 0.5% by weight $HNO_3$ at 70° C.

| | | | |
|---|---|---|---|
| 0.7 l 53% $HNO_3$ | + | 100 l water | = Cleaning agent. |

**4**

1. Avoid excessive concentration of the cleaning agent

   ⇒ **Dose gradually!**

2. Adjust the cleaning flow to the process

   ⇒ **Milk sterilization/viscous liquids**

   ⇒ **Increase the cleaning flow!**

3. Flip the valve during cleaning, if possible.

**5**

**Always rinse!**

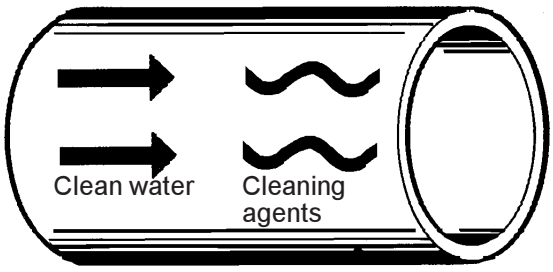


**Always** rinse well with clean water after the cleaning.

**NOTE!**
The cleaning agents must be stored/disposed of in accordance with current rules/directives.

# Maintenance

*Maintain the valve regularly.*
*Study the instructions carefully and pay special attention to the warnings!*

*Always keep spare seals in stock.*

## 1. General maintenance

**1**

- **Always** read the technical data thoroughly (see page 23).
- **Always** release compressed air after use.

**NOTE!**
All scrap must be stored/disposed of in accordance with current rules/directives.

**2**

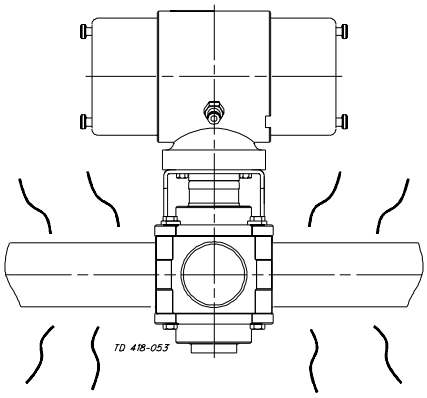


- **Never** service the valve when it is hot.
- **Never** service the valve with valve and pipelines under pressure.

**3**

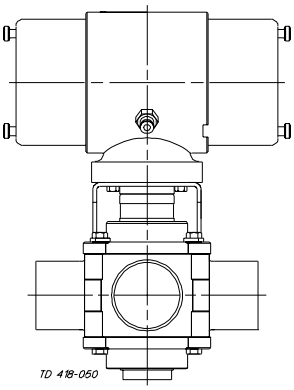


**Cutting danger!**

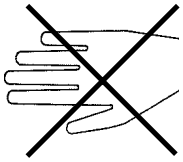

**Never** stick your fingers through the valve ports if the actuator is supplied with compressed air.

**4**

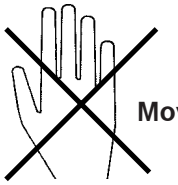

**Moving part!**

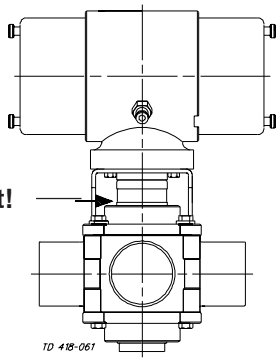


**Never** touch the spindle if the actuator is supplied with compressed air.

### Ordering spare parts

- Contact the Sales Department.
- Order from the Spare Parts List.

**Recommended spare parts: Service kits (see Spare Parts List).**

*Maintain the valve regularly.*
*Study the instructions carefully.*

*Always keep spare rubber seals in stock.*
*Check the valve for smooth operation after service.*

## 1. General maintenance

| | Valve rubber seals | Shutter | Actuator rubber seals |
|---|---|---|---|
| Preventive maintenance | **Replace after 12 months** | **Adjust shutter after every 1500 turns** | **Replace after 5 years** |
| Maintenance after leakage (leakage normally starts slowly) | **Replace at the end of the day** | Adjust shutter | **Replace when possible** |
| Planned maintenance | - Regular inspection for leakage and smooth operation<br>- Keep a record of the valve<br>- Use the statistics for planning of inspections | Regular inspection for wear and smooth operation | - Regular inspection for leakage and smooth operation<br>- Keep a record of the actuator<br>- Use the statistics for planning of inspections |
| Lubrication | **Before fitting:**<br>Silicone oil or silicone grease (USDA H1 approved oil/grease) | | **Before fitting:**<br>Oil or grease |

**Pre-use check:**

1. Supply compressed air to the actuator.
2. Operate the valve several times to ensure that it runs smoothly.
   **Pay special attention to the warnings!**

*Study the instructions carefully.*
*The items refer to the drawings and parts list on pages 24-27.*

*Handle scrap correctly.*
*A/A = Air/air activated.*

## 2. Dismantling of valve

**1**

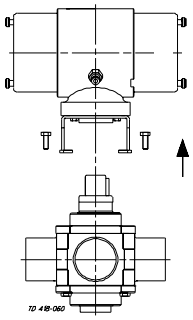


⚠ **Never** dismantle the valve with valve and pipelines under pressure.

**Air-operated valve:**

1. Loosen and remove screws (1).
2. Lift out the actuator and bonnet from the valve.
3. Remove top lid (2) from valve body (7).

**2**

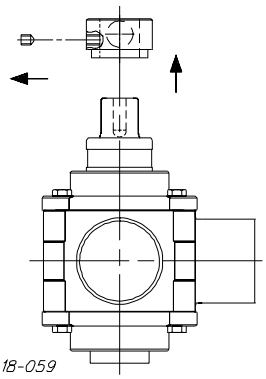


**Manually operated valve:**

1. Loosen the screw in handle (11).
2. Remove the handle from shaft (5).
3. Loosen and remove screws (1) and top lid (2) from valve body (7).

**3**

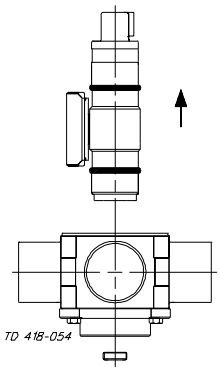


1. Loosen safety screw (9) and tightening device (8).
2. Pull out shaft (5) with shutter unit (6) from the valve body.
3. Loosen and remove screws (1) and bottom lid (2) from the valve body (if needed).

**4**

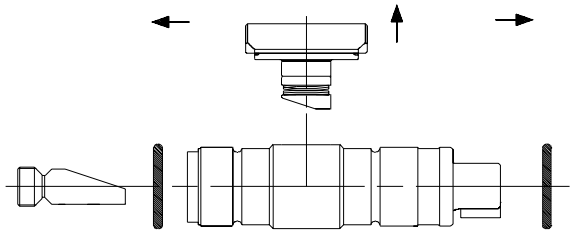


1. Pull out shutter unit (6) from shaft (5).
2. Remove tightening device (8) from shaft (5) (if necessary).
3. Pull off O-rings (4) from shaft (5).

**5**

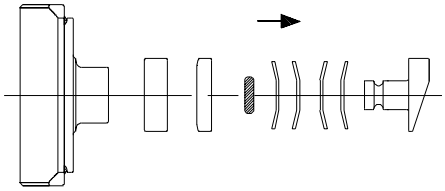

TD 418-055

1. Pull out adjustment key (6d) from the shutter.
2. Remove support ring (6c) and seal ring (6b) from shutter (6a).
3. Pull off O-ring (6f) and cup springs (6e) from the adjustment key.

**NOTE!**
When replacing the shutter replace the entire shutter unit.

**6**

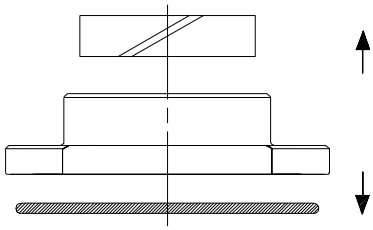

TD 418-058

Pull out O-rings (3) and guide rings (2a) from lids (2).

*Study the instructions carefully.*
*The items refer to the drawings and parts list on pages 24-27.*
*A/A = Air/air activated.*

*Before reassembly lubricate all O-rings with silicone oil or similar.*

## 3. Reassembly of valve

**1**

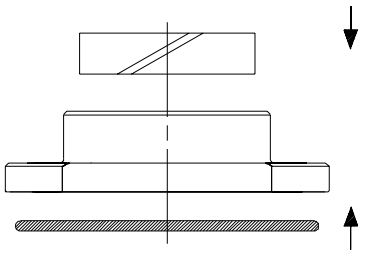

TD 418-058

Fit O-rings (3) and guide rings (2a) in lids (2).

**2**

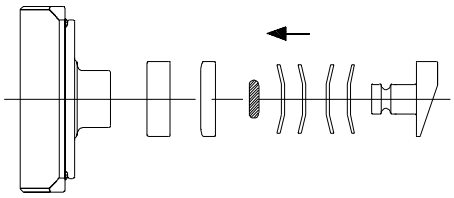

TD 418-055

1. Ensure that seal ring (6b) and support ring (6c) are fitted on shutter (6a).
2. Slide cup springs (6e) onto adjustment key (6d) - RE-MARK position!
3. Slide O-ring (6f) onto the adjustment key .
4. Push the adjustment key into shutter (6a).

**3**

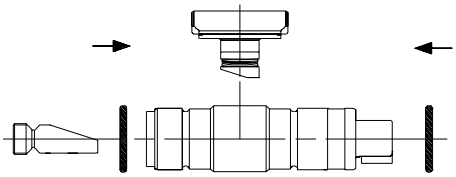

TD 418-056

1. Slide O-rings (4) onto shaft (5).
2. Push shutter unit (6) into shaft (5).
3. Ensure that the sloping surfaces of tightening device (8) and adjustment key (6d) get in contact (lubricate).
4. Screw tightening device (8) lightly into shaft (5) (lubricate).

**4**

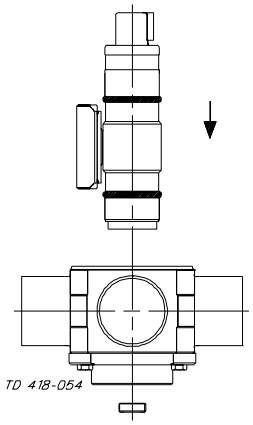

TD 418-054

1. Fit bottom lid (2) on valve body (7) and tighten screws (1) (if dismantled).
2. Slide shaft (5) with shutter unit (6) into the valve body.

**5**

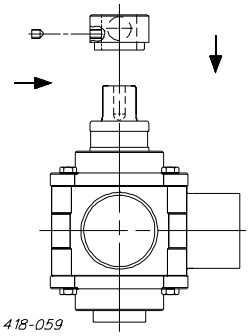

TD 418-059

**Manually operated valve:**

1. Fit top lid (2) on the valve body and tighten screws (1).
2. Adjust the tightness of the shutter according to the procedure on page 22.
3. Fasten safety screw (9) after shutter adjustment.
4. Fit handle (11) on shaft (5) with wedge (10) and tighten the screw.

**6**

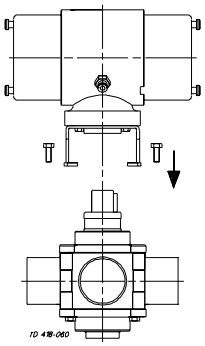

TD 418-060

**Air-operated valve:**

1. Fit top lid (2) and the bonnet on the valve body and tighten screws (1).
2. Adjust the tightness of the shutter according to the procedure on page 22.
3. Fasten safety screw (9) after shutter adjustment.

*Study the instructions carefully.*
*The items refer to the drawings and parts list on pages 24-27.*

*Lubricate all O-rings with silicone oil or similar before reassembly.*

## 3. Reassembly of valve (checkpoints)

**7**

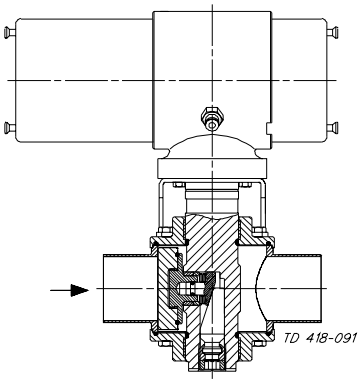


**Air-operated valve:**
Check that the shutter unit exactly covers the correct outlet.

**8**

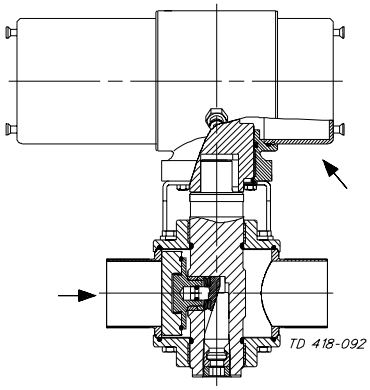


**Air-operated valve:**
Check that the position of the actuator fits the position of the shutter unit.

**9**

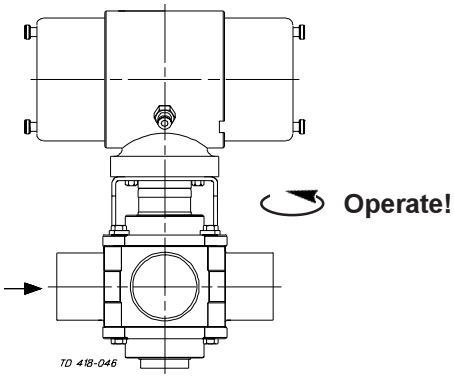


1. Check that the shutter opens/closes correctly.
2. Check the valve for smooth operation after reassembly.

**Pay special attention to the warnings!**

*Study the instructions carefully.*
*The items refer to the drawings and parts list on pages 28-39.*

*Handle scrap correctly.*

## 4. Dismantling of actuator, type 631/632

**1**

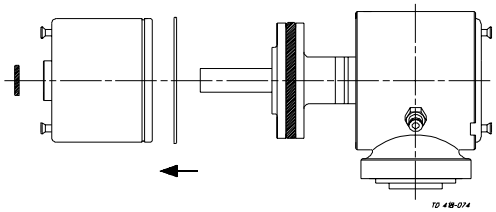


1. Turn cylinder (16 or 16a) anticlockwise to unhook lock wire (19) and remove the lock wire (turn the cylinder slightly clockwise to loosen the lock wire).
2. Remove the cylinder from chassis (1).
3. Pull out O-ring (15) from cylinder (16a) (only with indication) (only remove cylinder (17) if damaged.

**2**

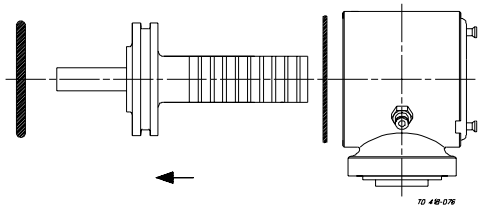


1. Pull out piston (10) from chassis (1). (For sizes 89-101.6 mm/DN80-100: both pistons).
2. Pull off O-ring (11) from the piston. (For sizes 89-101.6 mm/DN80-100: both O-rings from both pistons).

**3**

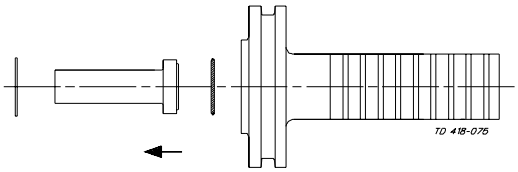


**Only cylinders with indication:**
1. Remove circlip (14) from piston (10).
2. Take out indication stem (12) from the piston.
3. Pull off O-ring (13) from the indication stem.

**4**

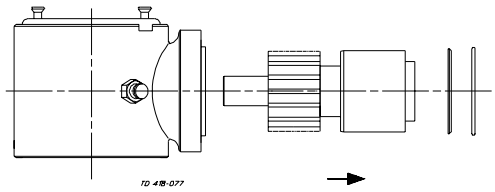


1. Remove lock ring (9) and bearing (8) from chassis (1).
2. Pull out spindle (2) from the chassis/piston.

**5**

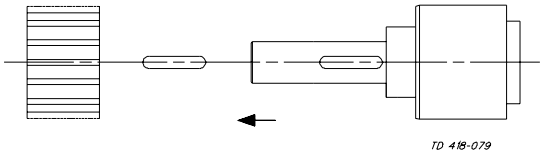


Remove gear wheel (4) and wedge (3) from spindle (2).

**6**

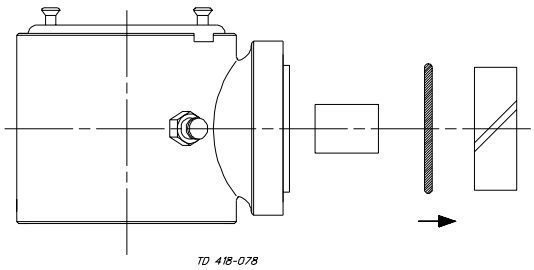


Pull out guide ring (7), O-ring (6) and bearing (5) from chassis (1). Tap the bearing loose with a rubber hammer, if necessary.

*Study the instructions carefully.*
*The items refer to the drawings and parts list on pages 28-39.*
*The auxiliary equipment is not supplied by Alfa Laval.*

*Lubricate all O-rings with silicone oil or similar before reassembly.*

## 4. Dismantling of actuator, type 630

**1**

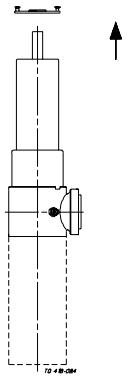

**For sizes 63.5-76.1 mm/DN65 with indication:**

1. Loosen and remove screws (26a) and cylinder lid (26).
2. Place chassis/cylinders (1/ 16, 17) in the auxiliary equipment.

**2**

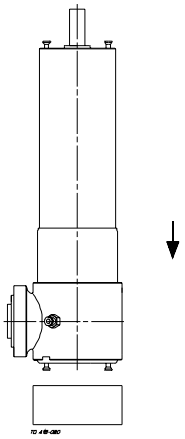

Position the auxiliary equipment with chassis/ cylinder in a press.

**3**

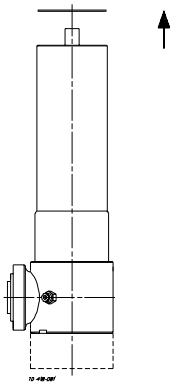

1. Press flange (24) into cylinder (16) using the press (with indication: flange (24) is replaced by flange(25)).
2. Remove lock wire (23) from the cylinder.
3. Remove the flange.

**4**

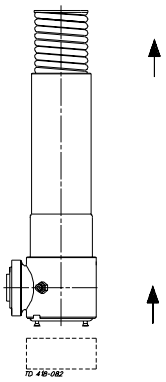

1. Remove chassis/cylinder (1/ 16, 17) from the auxiliary equipment.
2. Take out spring (22) from the cylinder.

**NOTE!**
For sizes 63.5-76.1 mm/DN65, instructions 1-4 on this page are repeated.

**5**

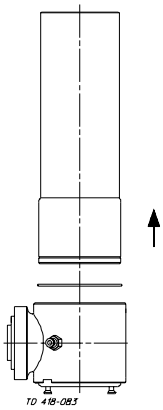

1. Turn cylinder (16) anticlockwise to unhook lock wire (19). Use a strapping tool to turn the cylinder.
2. Remove the cylinder from chassis (1).

**6**

Continue the dismantling by following instructions 2-6 on page 15.

*Study the instructions carefully.*
*The items refer to the drawings and parts list on pages 28-39.*

*Handle scrap correctly.*

## 4. Dismantling of actuator, type 633

**1**

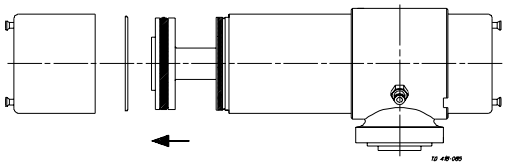

1. Turn auxiliary cylinder (28) anticlockwise to unhook lock wire (31).
2. Remove the auxiliary cylinder from cylinder (16).

**2**

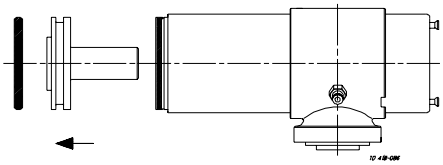

1. Pull out auxiliary piston (29) from cylinder (16).
2. Pull off O-ring (11) from the auxiliary piston.

**3**

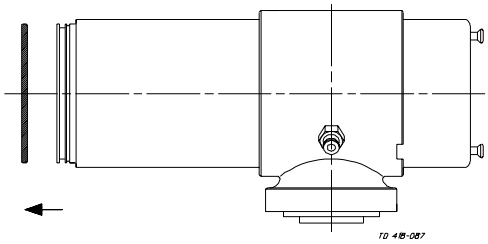


Pull off O-ring (30) from cylinder (16).
**NOTE!**
For sizes 89-101.6 mm/DN80-100, instructions 1-3 on this page are repeated.

**4**

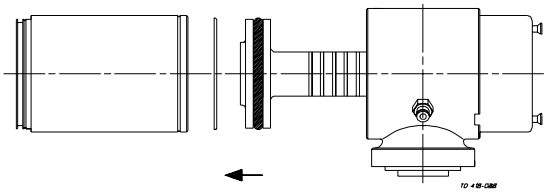

1. Turn cylinder (16) anticlockwise to unhook lock wire (19). Use a strapping tool to turn the cylinder.
2. Remove the cylinder from chassis (1).
3. Repeat this procedure for cylinder (17), if necessary.

**5**

Continue the dismantling by following instructions 2-6 on page 15.

*Study the instructions carefully.*
*The items refer to the drawings and parts list on pages 28-39.*

*Lubricate all O-rings with silicone oil or similar before reassembly.*

## 5. Reassembly of actuator, type 631/632

**1**

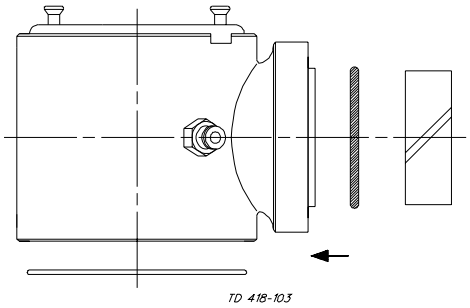


Fit guide ring (7) and O-rings (6,18) in chassis (1) .

**2**

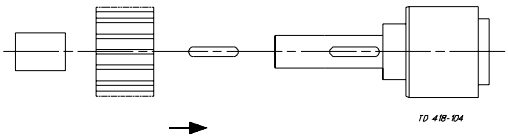


1. Fit wedge (3), gear wheel (4) and bearing (5) on spindle (2) (lubricate).
2. Guide/work the spindle into the chassis.

**3**

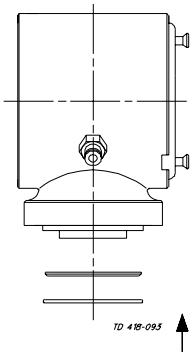


Fit bearing (8) and lock ring (9) into chassis (1).

**WARNING!**
Make sure that the lock ring is fitted well in its groove.

**4**

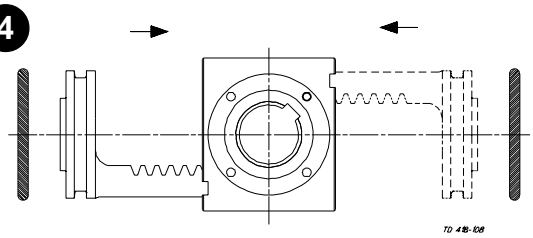


1. Adjust spindle (2) so that the notch has a 45° angle to pistons (10).
2. Position the piston(s) along the opposite inner sides of chassis (1) (lubricate teeth on piston(s) with grease type Longterm plus 2).
3. Press piston(s) into the chassis (at the same time for sizes 89-101.6 mm/DN80-100) (check that the notch has the correct angle to the piston(s)).
4. Slide O-ring(s) (11) onto the piston(s).

**5**

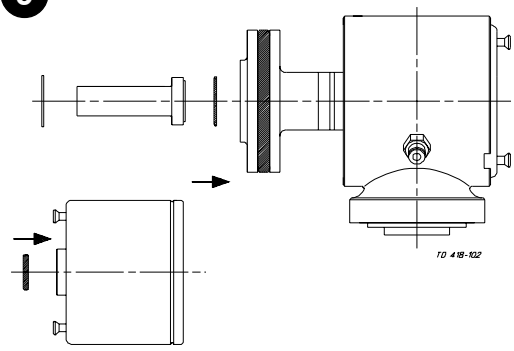


**Only with indication:**
1. Slide O-ring (13) onto indication stem (12).
2. Fit the indication stem in piston (10).
3. Fit circlip (14) in the piston.
4. Fit O-ring (15) in cylinder (16a).

**6**

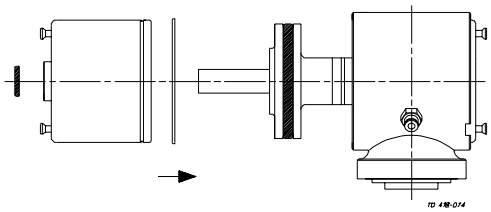


1. Fit cylinders (16/17) in the chassis (the notch in the chassis must be aligned with the dent in each cylinder).
2. Hook in lock wires (19) and turn each cylinder clockwise until the end of the lock wire slips into the notch in the chassis (turn cylinder slightly back to secure lock wire).

*Study the instructions carefully.*
*The items refer to the drawings and parts list on pages 28-39.*

*Lubricate all O-rings with silicone oil or similar before reassembly.*

## 5. Reassembly of actuator, type 630

**1**

Reassemble the actuator by following instructions 1-6 on page 18. Then proceed by following instructions 2-5 on this page.

**2**

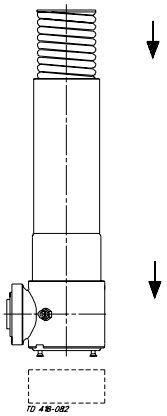

Place chassis/cylinder (1/ 17) in auxiliary equipment with mounted cylinder downwards.
Fit spring (22) in the middle of cylinder (16) so that it does not contact the inner surface.

**3**

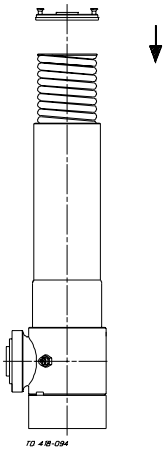

1. Place the auxiliary equipment with the cylinders in a press.
2. Fit flange (24) on the middle of spring (22).

**4**

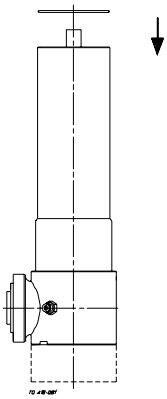

1. Press flange (24) into cylinder (16).
2. Fit lock wire (23) in the cylinder.
3. Remove the actuator from the press. (For sizes 63.5-76.1 mm/DN65, instructions 2-4 are repeated)

**5**

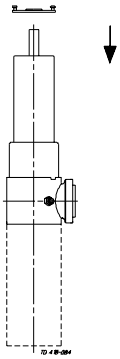

**Only with indication:**
Instructions 2-4 are repeated. When repeating these instructions use flange (25) instead of flange (24).
For sizes 63.5-76.1 mm/DN65: attach cylinder lid (26) to the cylinder with screws (26a).

*Study the instructions carefully.*
*The items refer to the drawings and parts list on pages 28-39.*

*Lubricate all O-rings with silicone oil or similar before reassembly.*

## 5. Reassembly of actuator, type 633

**1**

Reassemble the actuator by following instructions 1-3 on page 18. Then proceed by following instructions 2-5 on this page.

**2**

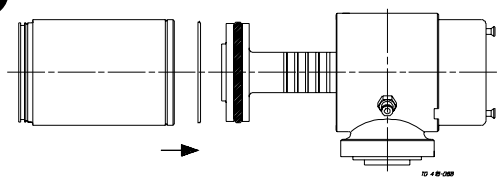

1. Fit cylinder (16) in chassis (1) (the notch in the chassis must be aligned with the dent in the cylinder).
2. Hook in lock wire (19) and turn the cylinder clockwise until the end of the lock wire slips into the notch in the chassis. Use a strapping tool (turn the cylinder slightly back to secure the lock wire).
3. Fasten cylinder (17) to the chassis the same way (if dismantled).

**3**

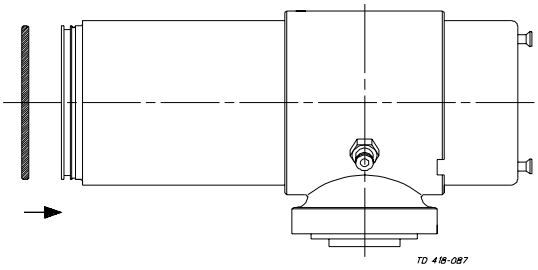


Fit O-ring (30) on cylinder (16).

**4**

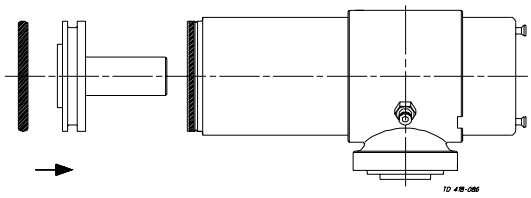


1. Fit O-ring (11) on auxiliary piston (29).
2. Guide the auxiliary piston into cylinder (16).

**5**

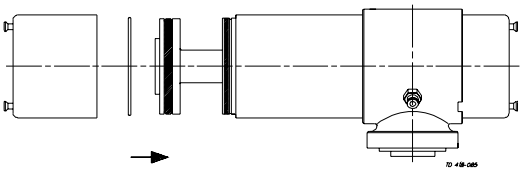


1. Fit auxiliary cylinder (28) on cylinder (16).
2. Hook in lock wire (23) and turn the auxiliary cylinder clockwise until the end of the lock wire slips into the hole in the cylinder.

**NOTE!**
For sizes 89-101.6 mm/DN80-100, instructions 3-5 on this page are repeated.

*Study the instructions carefully.*
*The items refer to the drawings and parts list on pages 28-39.*

*Lubricate all O-rings with silicone oil or similar before reassembly.*

## 6. Dismantling/Reassembly of special indication units

**1**

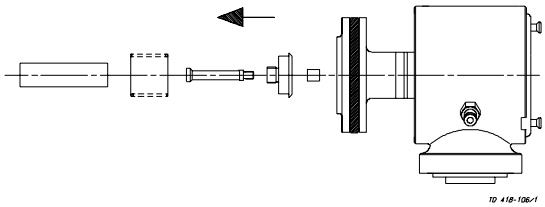


**Dismantling - telescope indication:**
1. Pull off spring (12b) from screw (12c).
2. Unscrew and remove indication stem (12a) from the screw.
3. Unscrew and remove extension stem (12d) with screw from piston (10).

**2**

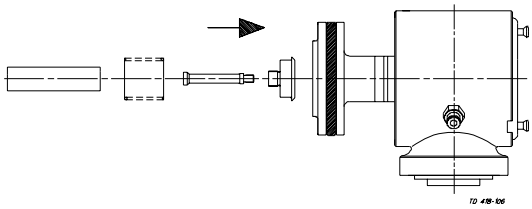


**Reassembly - telescope indication:**
1. Screw the extension stem with screw into piston (10). (Use Loctite 243).
2. Screw indication stem (12a) onto the screw.
3. Press/turn spring (12b) onto the screw.

**3**

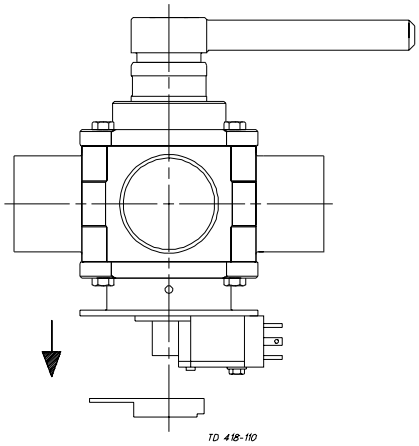


**Dismantling - laterally fitted indication:**
1. Loosen the screw in the indicator.
2. Pull off the indicator.

**4**

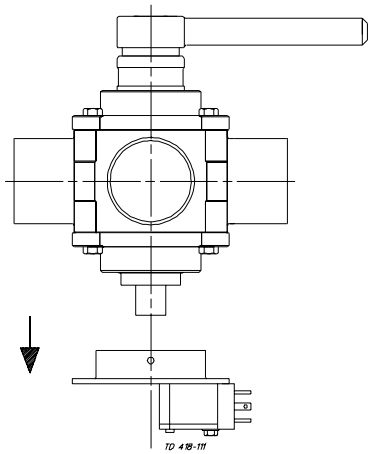


**Dismantling - laterally fitted indication:**
1. Loosen the screw(s) in the mounting bracket.
2. Remove the mounting bracket.

**5**

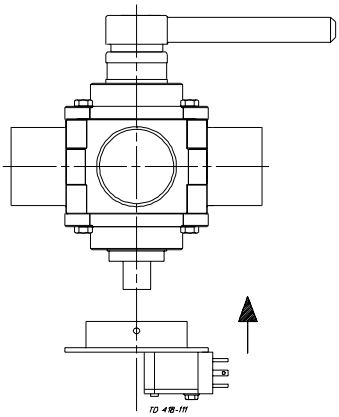


**Reassembly - laterally fitted indication:**
1. Fit the mounting bracket on the valve.
2. Tighten the screw(s) in the mounting bracket.

**6**

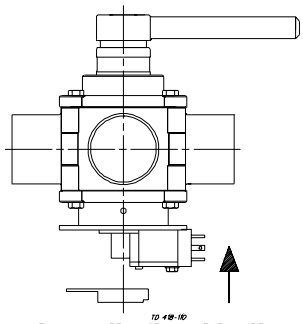


**Reassembly - laterally fitted indication:**
1. Fit the indicator.
2. Adjust the indicator/mounting bracket and tighten the screw.

**NOTE!**
Ensure that the indicator indicates all positions of the valve. For 180° actuator: Cut off the indicator pin to enable a full indicator turn.

*Study the instructions carefully.*
*The items refer to the drawings and parts list on pages 24-27.*

*Adjust the shutter before operating the valve!*

## 7. Shutter adjustment

**1**

**NOTE!**
All Koltek valves are delivered with shutter loosened after pressure test. The shutter must therefore be adjusted before operating the valve.
**Adjust the shutter after every 1500 turns.**

**2**

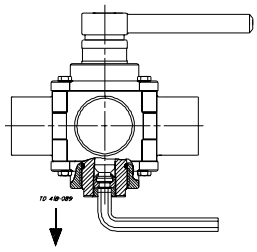

1. Put the shutter in neutral position (free of ports).
2. Loosen safety screw (9).
3. Holding an Allen key by the short length, tighten until resistance is felt.
4. Change the grip and, holding the Allen key by the long length, tighten the tightening device 1½ round (540°) further. Please note that the torque will only be an approximation using this method.

**3**

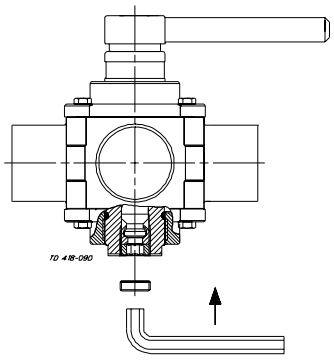

Fit safety screw (9) and tighten with the Allen key.

**CAUTION!**
Do not tighten the tightening device further.

**4**

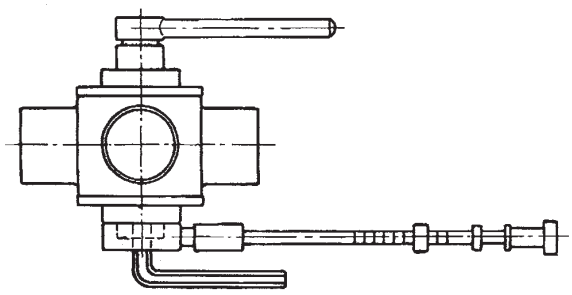

**Alternative adjustment:**
1. Bring shutter in neutral position.
2. Tightening device (8) is tightened with an Allen key until the required torque is achieved (see table below).

**5**

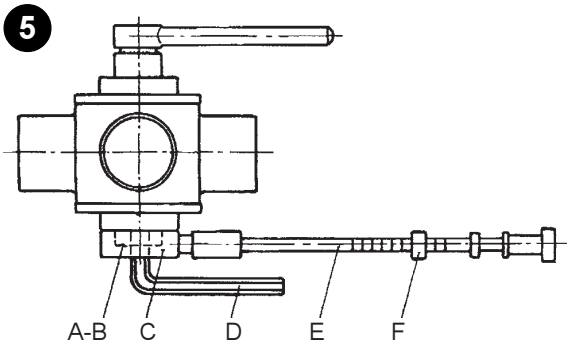


A. Spindle.
B. Adjusting screw.
C. Driver.
D. Allen key.
E. Torque wrench.
F. Adjusting scale.

**6**

**NOTE!**
If a torque wrench is used to determine the torque, the listed size of driver should be used on the lower end of shaft (5).

**Recommended torque values, Nm:**

| Valve size mm | Bearing | | | Size of driver |
|---|---|---|---|---|
| | Bronze | PTFE | Guide ring strip | |
| DN25/25 mm | 5 | 3 | 2 | 21 |
| DN40/38 mm | 15 | 10 | 8 | 27 |
| DN50/51 mm | 20 | 12 | 10 | 36 |
| 63 mm | 30 | 20 | 19 | 36 |
| DN65/76.1 mm | 45 | 27 | 22 | 36 |
| DN80 | 51 | 31 | 26 | 41 |
| DN100/101.6 mm | 110 | 80 | 67 | 41 |

*It is important to observe the technical data during installation, operation and maintenance.*

*Inform the personnel about the technical data.*

## 1. Technical data

### Data - valve

| | |
|---|---|
| Max. pressure against shutter | 300 kPa (3 bar) |
| Max. pressure behind shutter | 1000 kPa (10 bar) |
| Temperature range | -10° C to +110° C |

### Data - actuator

| | |
|---|---|
| Max. air pressure for actuator | 800 kPa (8 bar) |
| Min. air pressure for actuator | 500 kPa (5 bar) |

### Materials

| | |
|---|---|
| Product wetted steel parts | AISI 316L |
| Finish | Semi bright |
| Other steel parts | AISI 304 |
| Product wetted seals | EPDM |
| Other seals | Nitrile (NBR) |
| Shutter | PTFE |

*The drawings and the parts list include all items.*

*The items are identical with the items in the Spare Parts List.*
*When ordering spare parts, please use the Spare Parts List!*

## Parts list
## KOLTEK valve, type MH



| Item | Quant. | Denomination |
|---|---|---|
| 1 | 8 | Screw |
| 2 | 2 | Lid |
| 2a Δ | 2 | Guide ring (strip) |
| 3 Δ | 2 | O-ring |
| 4 Δ | 2 | O-ring |
| 5 | 1 | Shaft |
| 6 Δ | 1 | Shutter unit |
| 6a | 1 | Shutter |
| 6b | 1 | Seal ring |
| 6c | 1 | Support ring |
| 6d | 1 | Adjustment key |
| 6e | 4 | Cup spring |
| 6f | 1 | O-ring |
| 7 | 1 | Valve body |
| 8 | 1 | Tightening device |
| 9 | 1 | Safety screw |
| 10 | 1 | Wedge |
| 11 | 1 | Handle |
| 12 | 1 | Screw |

Δ : Recommended Spare Parts.

*This page shows an exploded drawing of KOLTEK.*

*The drawing includes all items of the valve and the handle.*
*They are identical with the items in the Spare Parts List.*

## Exploded drawing

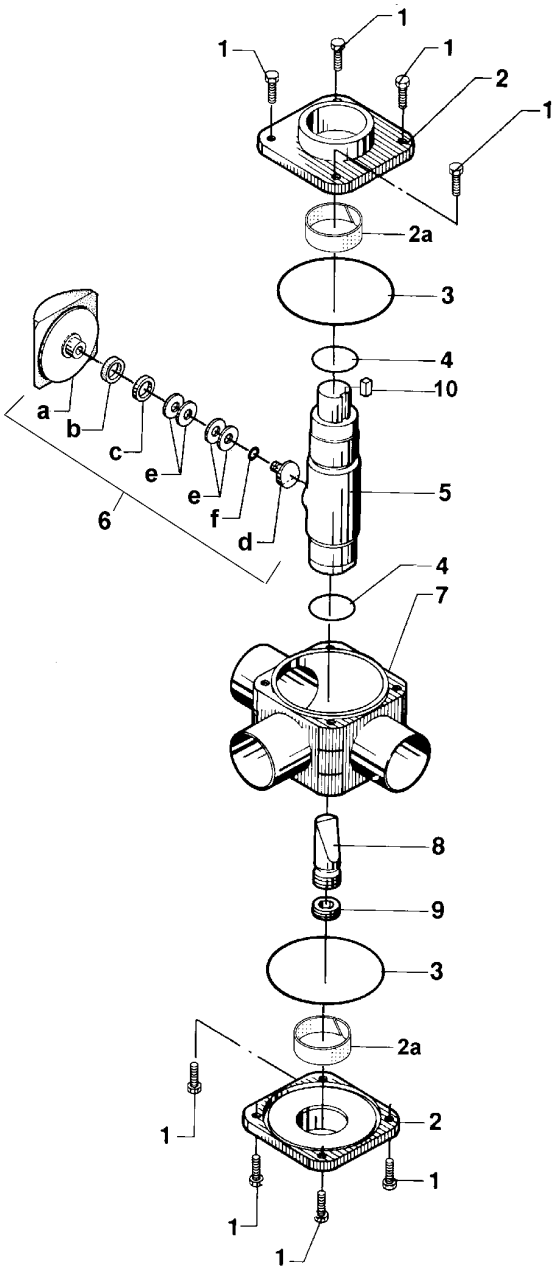


### Bearing and lid for bearing

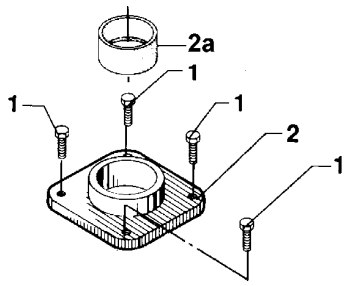


### Handle

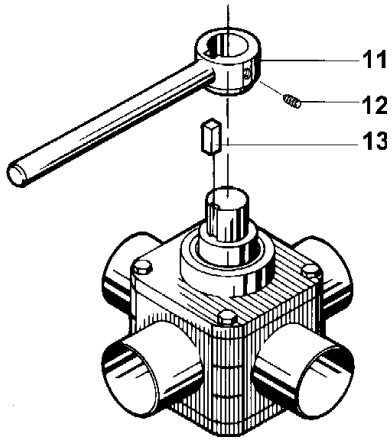

*The drawings and the parts list include all items.*

*The items are identical with the items in the Spare Parts List.*
*When ordering spare parts, please use the Spare Parts List!*

## Parts list
## KOLTEK valve, type MH



| Item | Quant. | Denomination |
|---|---|---|
| 1 | 8 | Screw |
| 2 | 2 | Lid |
| 2a Δ | 2 | Guide ring (strip) |
| 3 Δ | 2 | O-ring |
| 4 Δ | 2 | O-ring |
| 5 | 1 | Shaft |
| 6 Δ | 1 | Shutter unit |
| 6a | 1 | Shutter |
| 6b | 1 | Seal ring |
| 6c | 1 | Support ring |
| 6d | 1 | Adjustment key |
| 6e | 4 | Cup spring |
| 6f | 1 | O-ring |
| 7 | 1 | Valve body |
| 8 | 1 | Tightening device |
| 9 | 1 | Safety screw |
| 10 | 1 | Wedge |
| 11 | 1 | Handle |
| 12 | 1 | Screw |

Δ : Recommended Spare Parts.

*The drawings below show KOLTEK valve.*

*The items refer to the parts list on the opposite part of the page.*

## Drawings

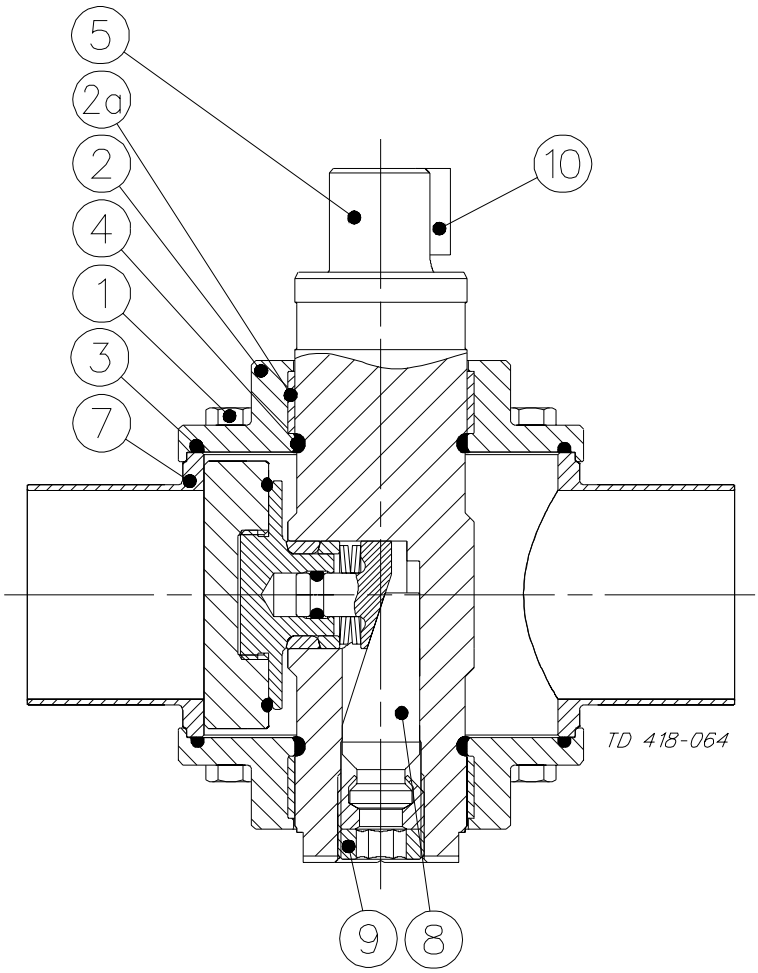


**MH valve**

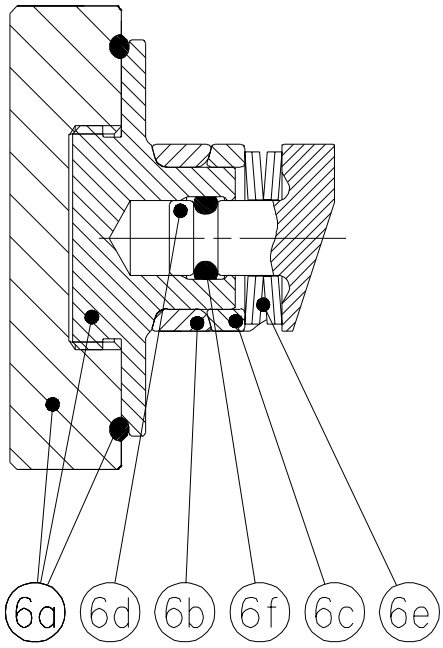


**Shutter unit**

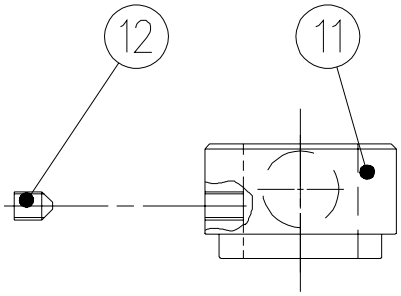


**Handle**

*The drawings and the parts list include all items.*

*The items are identical with the items in the Spare Parts List.*
*When ordering spare parts, please use the Spare Parts List!*

## Parts list
## Actuator type 631/632



| Item | Quant. | Denomination |
|---|---|---|
| 1 | 1 | Chassis |
| 2 | 1 | Spindle |
| 3 | 1 | Wedge |
| 4 | 1 | Gear wheel |
| 5 | 1 | Bearing |
| 6Δ | 1 | O-ring |
| 7Δ | 1 | Guide ring |
| 8Δ | 1 | Bearing |
| 9 | 1 | Lock ring |
| 10 | 1 | Piston |
| | 2 | Piston (type 631, sizes 80-101.6) |
| | 2 | Piston (type 632, sizes 80-101.6) |
| 11Δ | 1 | O-ring |
| | 2 | O-ring |
| | 3 | O-ring (type 633, sizes 25-76.1) |
| | 4 | O-ring (type 633, sizes 89-101.6) |
| 12 | 1 | Indication stem |
| a | 1 | Indication stem for telescope indication |
| b | 1 | Spring for telescope indication |
| c | 1 | Screw for telescope indication |
| d | 1 | Extension stem for telescope indication |
| 13Δ | 1 | O-ring |
| 14 | 1 | Circlip |
| 15Δ | 1 | O-ring |
| 16 | 1 | Cylinder |
| | 2 | Cylinder (type 630, sizes 63-76.1) |
| | 2 | Cylinder (type 633, sizes 89-101.6) |
| a | 1 | Cylinder for indication |
| 17 | 1 | Cylinder |
| 18Δ | 2 | O-ring |
| 19 | 2 | Lock wire |
| 20 | 1 | Bonnet |
| 21 | 4 | Screw |
| 22 | 1 | Spring (type 630, sizes 25-51) |
| | 2 | Spring (type 630, sizes 63-76) |
| 23 | 1 | Lock wire (type 630, sizes 25-51) |
| | 2 | Lock wire (type 630, sizes 63-76.1) |
| 24 | 1 | Flange |
| 25 | 1 | Flange for indication |
| 26 | 1 | Cylinder lid |
| a | 2 | Screw |
| 27 | 1 | Screw for indication stem |
| 28 | 1 | Auxiliary cylinder (type 633, sizes 25-76.1) |
| | 2 | Auxiliary cylinder (type 633, sizes 89-101.6) |
| 29 | 1 | Auxiliary piston (type 633, sizes 25-76.1) |
| | 2 | Auxiliary piston (type 633, sizes 89-101.6) |
| 30Δ | 1 | O-ring (type 633, sizes 25-76.1) |
| | 2 | O-ring (type 633, sizes 89-101.6) |
| 31 | 1 | Lock wire (type 633, sizes 25-76.1) |
| | 2 | Lock wire (type 633, sizes 89-101.6) |
| 32 | 1 | Air fitting (type 630) |
| | 2 | Air fitting (type 631, 632) |
| | 3 | Air fitting (type 633, sizes 25-76.1) |
| | 5 | Air fitting (type 633, sizes 89-101.6) |
| 33 | 1 | Guide for indication |
| 34 | 1 | Spindle extension (only for size 25) |

Δ : Recommended Spare Parts.

*This page shows an exploded drawing of KOLTEK.*

*The drawing includes all items of the actuator. They are identical with the items in the Spare Parts List.*

## Exploded drawing

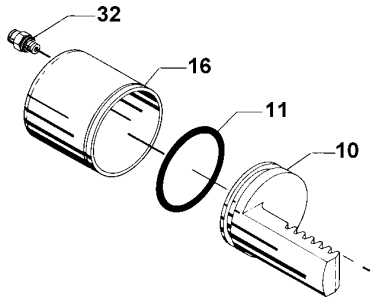


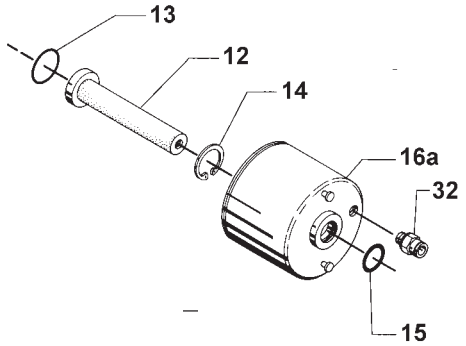


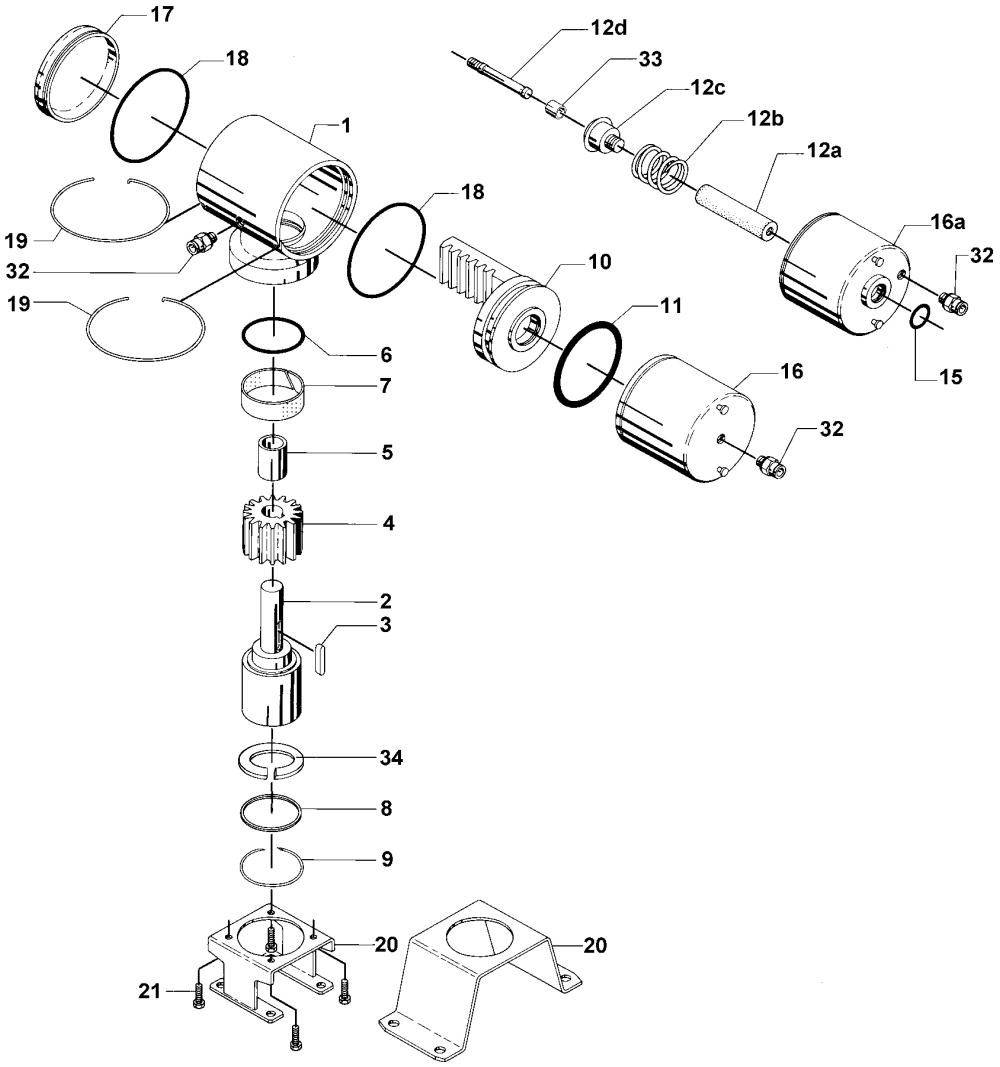

*The drawings and the parts list include all items.*

*The items are identical with the items in the Spare Parts List.*
*When ordering spare parts, please use the Spare Parts List!*

## Parts list
## Actuator type 631/632



| Item | Quant. | Denomination |
|---|---|---|
| 1 | 1 | Chassis |
| 2 | 1 | Spindle |
| 3 | 1 | Wedge |
| 4 | 1 | Gear wheel |
| 5 | 1 | Bearing |
| 6Δ | 1 | O-ring |
| 7Δ | 1 | Guide ring |
| 8Δ | 1 | Bearing |
| 9 | 1 | Lock ring |
| 10 | 1 | Piston |
| | 2 | Piston (type 631, sizes 80-101.6) |
| | 2 | Piston (type 632, sizes 80-101.6) |
| 11Δ | 1 | O-ring |
| | 2 | O-ring |
| | 3 | O-ring (type 633, sizes 25-76.1) |
| | 4 | O-ring (type 633, sizes 89-101.6) |
| 12 | 1 | Indication stem |
| a | 1 | Indication stem for telescope indication |
| b | 1 | Spring for telescope indication |
| c | 1 | Screw for telescope indication |
| d | 1 | Extension stem for telescope indication |
| 13Δ | 1 | O-ring |
| 14 | 1 | Circlip |
| 15Δ | 1 | O-ring |
| 16 | 1 | Cylinder |
| | 2 | Cylinder (type 630, sizes 63-76.1) |
| | 2 | Cylinder (type 633, sizes 89-101.6) |
| a | 1 | Cylinder for indication |
| 17 | 1 | Cylinder |
| 18Δ | 2 | O-ring |
| 19 | 2 | Lock wire |
| 20 | 1 | Bonnet |
| 21 | 4 | Screw |
| 22 | 1 | Spring (type 630, sizes 25-51) |
| | 2 | Spring (type 630, sizes 63-76) |
| 23 | 1 | Lock wire (type 630, sizes 25-51) |
| | 2 | Lock wire (type 630, sizes 63-76.1) |
| 24 | 1 | Flange |
| 25 | 1 | Flange for indication |
| 26 | 1 | Cylinder lid |
| a | 2 | Screw |
| 27 | 1 | Screw for indication stem |
| 28 | 1 | Auxiliary cylinder (type 633, sizes 25-76.1) |
| | 2 | Auxiliary cylinder (type 633, sizes 89-101.6) |
| 29 | 1 | Auxiliary piston (type 633, sizes 25-76.1) |
| | 2 | Auxiliary piston (type 633, sizes 89-101.6) |
| 30Δ | 1 | O-ring (type 633, sizes 25-76.1) |
| | 2 | O-ring (type 633, sizes 89-101.6) |
| 31 | 1 | Lock wire (type 633, sizes 25-76.1) |
| | 2 | Lock wire (type 633, sizes 89-101.6) |
| 32 | 1 | Air fitting (type 630) |
| | 2 | Air fitting (type 631, 632) |
| | 3 | Air fitting (type 633, sizes 25-76.1) |
| | 5 | Air fitting (type 633, sizes 89-101.6) |
| 33 | 1 | Guide for indication |
| 34 | 1 | Spindle extension (only for size 25) |

Δ : Recommended Spare Parts.

*The drawings below show KOLTEK actuators.*

*The items refer to the parts list on the opposite part of the page.*

## Drawings

### Type 631 (sizes 25-76.1 mm/DN25-65)

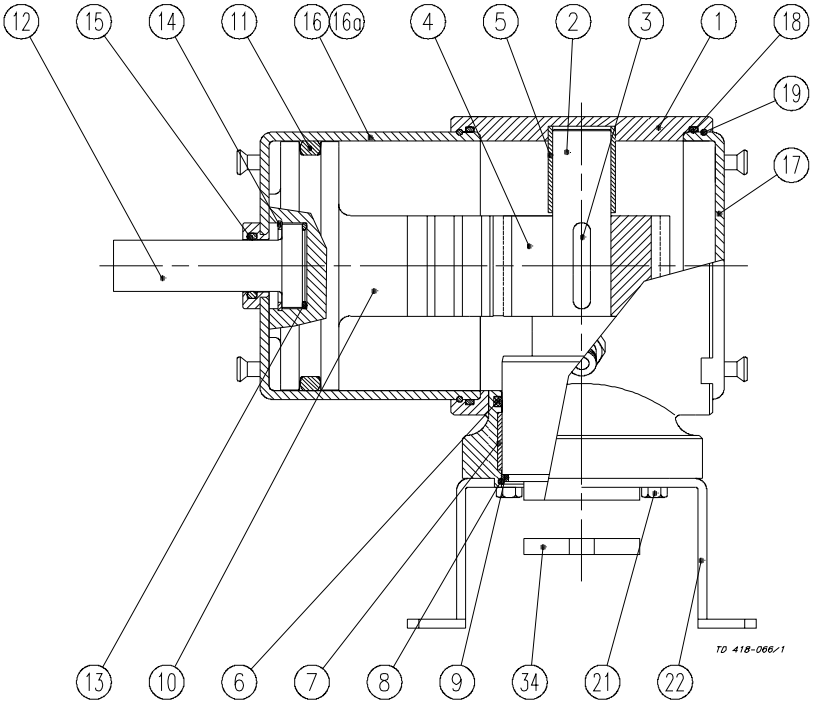


### Telescope indication (type 632)

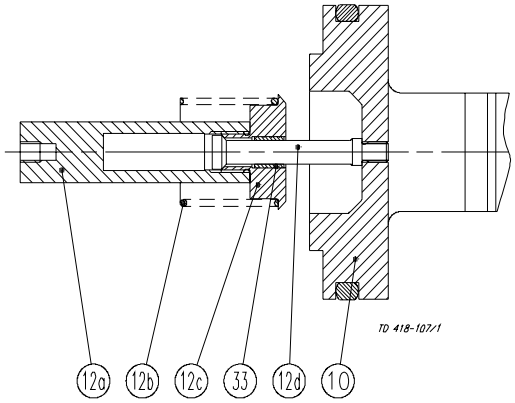

*The drawings and the parts list include all items.*

*The items are identical with the items in the Spare Parts List.*
*When ordering spare parts, please use the Spare Parts List!*

## Parts list
## Actuator type 630



| Item | Quant. | Denomination |
|---|---|---|
| 1 | 1 | Chassis |
| 2 | 1 | Spindle |
| 3 | 1 | Wedge |
| 4 | 1 | Gear wheel |
| 5 | 1 | Bearing |
| 6Δ | 1 | O-ring |
| 7Δ | 1 | Guide ring |
| 8Δ | 1 | Bearing |
| 9 | 1 | Lock ring |
| 10 | 1 | Piston |
| | 2 | Piston (type 631, sizes 80-101.6) |
| | 2 | Piston (type 632, sizes 80-101.6) |
| 11Δ | 1 | O-ring |
| | 2 | O-ring |
| | 3 | O-ring (type 633, sizes 25-76.1) |
| | 4 | O-ring (type 633, sizes 89-101.6) |
| 12 | 1 | Indication stem |
| a | 1 | Indication stem for telescope indication |
| b | 1 | Spring for telescope indication |
| c | 1 | Screw for telescope indication |
| d | 1 | Extension stem for telescope indication |
| 13Δ | 1 | O-ring |
| 14 | 1 | Circlip |
| 15Δ | 1 | O-ring |
| 16 | 1 | Cylinder |
| | 2 | Cylinder (type 630, sizes 63-76.1) |
| | 2 | Cylinder (type 633, sizes 89-101.6) |
| a | 1 | Cylinder for indication |
| 17 | 1 | Cylinder |
| 18Δ | 2 | O-ring |
| 19 | 2 | Lock wire |
| 20 | 1 | Bonnet |
| 21 | 4 | Screw |
| 22 | 1 | Spring (type 630, sizes 25-51) |
| | 2 | Spring (type 630, sizes 63-76) |
| 23 | 1 | Lock wire (type 630, sizes 25-51) |
| | 2 | Lock wire (type 630, sizes 63-76.1) |
| 24 | 1 | Flange |
| 25 | 1 | Flange for indication |
| 26 | 1 | Cylinder lid |
| a | 2 | Screw |
| 27 | 1 | Screw for indication stem |
| 28 | 1 | Auxiliary cylinder (type 633, sizes 25-76.1) |
| | 2 | Auxiliary cylinder (type 633, sizes 89-101.6) |
| 29 | 1 | Auxiliary piston (type 633, sizes 25-76.1) |
| | 2 | Auxiliary piston (type 633, sizes 89-101.6) |
| 30Δ | 1 | O-ring (type 633, sizes 25-76.1) |
| | 2 | O-ring (type 633, sizes 89-101.6) |
| 31 | 1 | Lock wire (type 633, sizes 25-76.1) |
| | 2 | Lock wire (type 633, sizes 89-101.6) |
| 32 | 1 | Air fitting (type 630) |
| | 2 | Air fitting (type 631, 632) |
| | 3 | Air fitting (type 633, sizes 25-76.1) |
| | 5 | Air fitting (type 633, sizes 89-101.6) |
| 33 | 1 | Guide for indication |
| 34 | 1 | Spindle extension (only for size 25) |

Δ : Recommended Spare Parts.

*This page shows an exploded drawing of KOLTEK.*

*The drawing includes all items of the actuator. They are identical with the items in the Spare Parts List.*

## Exploded drawing

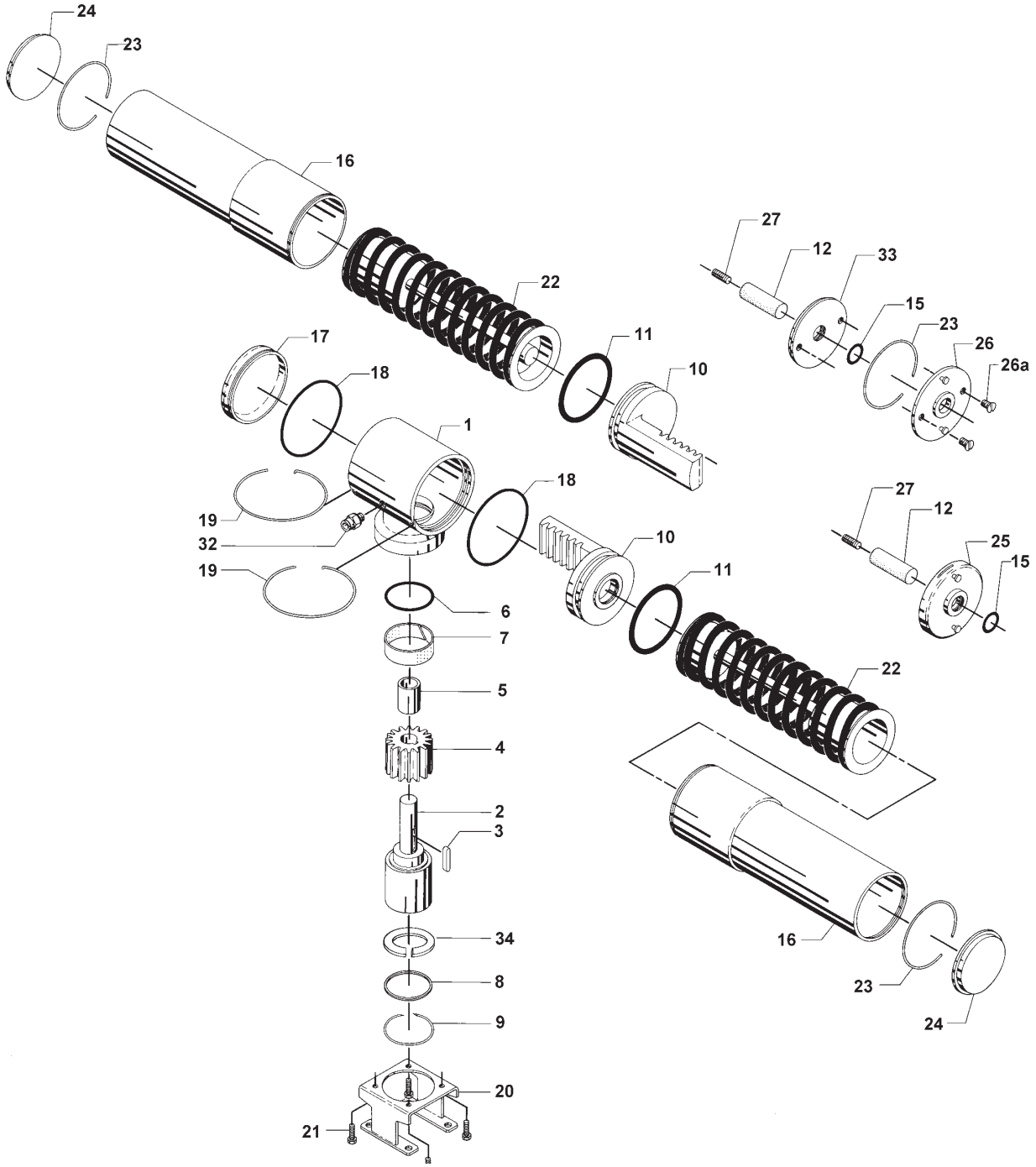

*The drawings and the parts list include all items.*

*The items are identical with the items in the Spare Parts List.*
*When ordering spare parts, please use the Spare Parts List!*

## Parts list
## Actuator type 630



| Item | Quant. | Denomination |
|---|---|---|
| 1 | 1 | Chassis |
| 2 | 1 | Spindle |
| 3 | 1 | Wedge |
| 4 | 1 | Gear wheel |
| 5 | 1 | Bearing |
| 6Δ | 1 | O-ring |
| 7Δ | 1 | Guide ring |
| 8Δ | 1 | Bearing |
| 9 | 1 | Lock ring |
| 10 | 1 | Piston |
| | 2 | Piston (type 631, sizes 80-101.6) |
| | 2 | Piston (type 632, sizes 80-101.6) |
| 11Δ | 1 | O-ring |
| | 2 | O-ring |
| | 3 | O-ring (type 633, sizes 25-76.1) |
| | 4 | O-ring (type 633, sizes 89-101.6) |
| 12 | 1 | Indication stem |
| a | 1 | Indication stem for telescope indication |
| b | 1 | Spring for telescope indication |
| c | 1 | Screw for telescope indication |
| d | 1 | Extension stem for telescope indication |
| 13Δ | 1 | O-ring |
| 14 | 1 | Circlip |
| 15Δ | 1 | O-ring |
| 16 | 1 | Cylinder |
| | 2 | Cylinder (type 630, sizes 63-76.1) |
| | 2 | Cylinder (type 633, sizes 89-101.6) |
| a | 1 | Cylinder for indication |
| 17 | 1 | Cylinder |
| 18Δ | 2 | O-ring |
| 19 | 2 | Lock wire |
| 20 | 1 | Bonnet |
| 21 | 4 | Screw |
| 22 | 1 | Spring (type 630, sizes 25-51) |
| | 2 | Spring (type 630, sizes 63-76) |
| 23 | 1 | Lock wire (type 630, sizes 25-51) |
| | 2 | Lock wire (type 630, sizes 63-76.1) |
| 24 | 1 | Flange |
| 25 | 1 | Flange for indication |
| 26 | 1 | Cylinder lid |
| a | 2 | Screw |
| 27 | 1 | Screw for indication stem |
| 28 | 1 | Auxiliary cylinder (type 633, sizes 25-76.1) |
| | 2 | Auxiliary cylinder (type 633, sizes 89-101.6) |
| 29 | 1 | Auxiliary piston (type 633, sizes 25-76.1) |
| | 2 | Auxiliary piston (type 633, sizes 89-101.6) |
| 30Δ | 1 | O-ring (type 633, sizes 25-76.1) |
| | 2 | O-ring (type 633, sizes 89-101.6) |
| 31 | 1 | Lock wire (type 633, sizes 25-76.1) |
| | 2 | Lock wire (type 633, sizes 89-101.6) |
| 32 | 1 | Air fitting (type 630) |
| | 2 | Air fitting (type 631, 632) |
| | 3 | Air fitting (type 633, sizes 25-76.1) |
| | 5 | Air fitting (type 633, sizes 89-101.6) |
| 33 | 1 | Guide for indication |
| 34 | 1 | Spindle extension (only for size 25) |

Δ : Recommended Spare Parts.

*The drawing below shows KOLTEK actuator.*

*The items refer to the parts list on the opposite part of the page.*

## Drawing

**Type 630**
**(sizes 63.5-76.1 mm/DN65)**



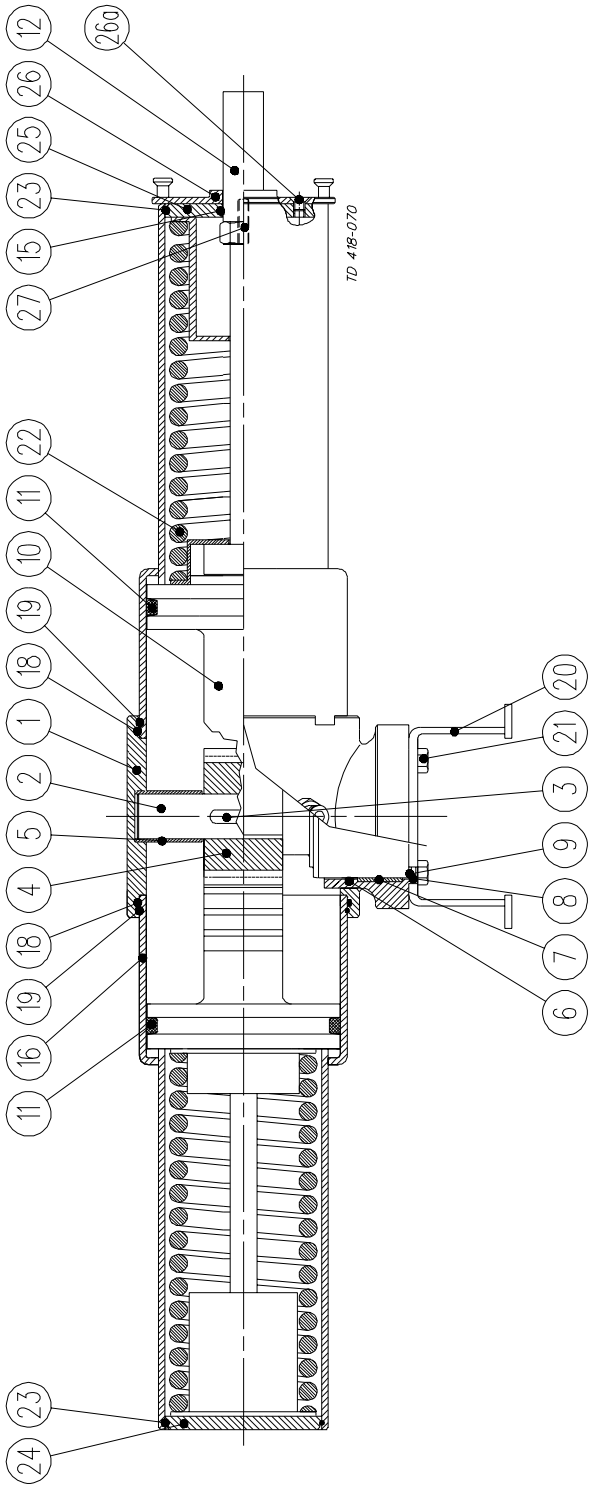

*The drawings and the parts list include all items.*

*The items are identical with the items in the Spare Parts List.*
*When ordering spare parts, please use the Spare Parts List!*

## Parts list
## Actuator type 633



| Item | Quant. | Denomination |
|---|---|---|
| 1 | 1 | Chassis |
| 2 | 1 | Spindle |
| 3 | 1 | Wedge |
| 4 | 1 | Gear wheel |
| 5 | 1 | Bearing |
| 6Δ | 1 | O-ring |
| 7Δ | 1 | Guide ring |
| 8Δ | 1 | Bearing |
| 9 | 1 | Lock ring |
| 10 | 1 | Piston |
| | 2 | Piston (type 631, sizes 80-101.6) |
| | 2 | Piston (type 632, sizes 80-101.6) |
| 11Δ | 1 | O-ring |
| | 2 | O-ring |
| | 3 | O-ring (type 633, sizes 25-76.1) |
| | 4 | O-ring (type 633, sizes 89-101.6) |
| 12 | 1 | Indication stem |
| a | 1 | Indication stem for telescope indication |
| b | 1 | Spring for telescope indication |
| c | 1 | Screw for telescope indication |
| d | 1 | Extension stem for telescope indication |
| 13Δ | 1 | O-ring |
| 14 | 1 | Circlip |
| 15Δ | 1 | O-ring |
| 16 | 1 | Cylinder |
| | 2 | Cylinder (type 630, sizes 63-76.1) |
| | 2 | Cylinder (type 633, sizes 89-101.6) |
| a | 1 | Cylinder for indication |
| 17 | 1 | Cylinder |
| 18Δ | 2 | O-ring |
| 19 | 2 | Lock wire |
| 20 | 1 | Bonnet |
| 21 | 4 | Screw |
| 22 | 1 | Spring (type 630, sizes 25-51) |
| | 2 | Spring (type 630, sizes 63-76) |
| 23 | 1 | Lock wire (type 630, sizes 25-51) |
| | 2 | Lock wire (type 630, sizes 63-76.1) |
| 24 | 1 | Flange |
| 25 | 1 | Flange for indication |
| 26 | 1 | Cylinder lid |
| a | 2 | Screw |
| 27 | 1 | Screw for indication stem |
| 28 | 1 | Auxiliary cylinder (type 633, sizes 25-76.1) |
| | 2 | Auxiliary cylinder (type 633, sizes 89-101.6) |
| 29 | 1 | Auxiliary piston (type 633, sizes 25-76.1) |
| | 2 | Auxiliary piston (type 633, sizes 89-101.6) |
| 30Δ | 1 | O-ring (type 633, sizes 25-76.1) |
| | 2 | O-ring (type 633, sizes 89-101.6) |
| 31 | 1 | Lock wire (type 633, sizes 25-76.1) |
| | 2 | Lock wire (type 633, sizes 89-101.6) |
| 32 | 1 | Air fitting (type 630) |
| | 2 | Air fitting (type 631, 632) |
| | 3 | Air fitting (type 633, sizes 25-76.1) |
| | 5 | Air fitting (type 633, sizes 89-101.6) |
| 33 | 1 | Guide for indication |
| 34 | 1 | Spindle extension (only for size 25) |

Δ : Recommended Spare Parts.

*This page shows an exploded drawing of KOLTEK.*

*The drawing includes all items of the actuator. They are identical with the items in the Spare Parts List.*

## Exploded drawing

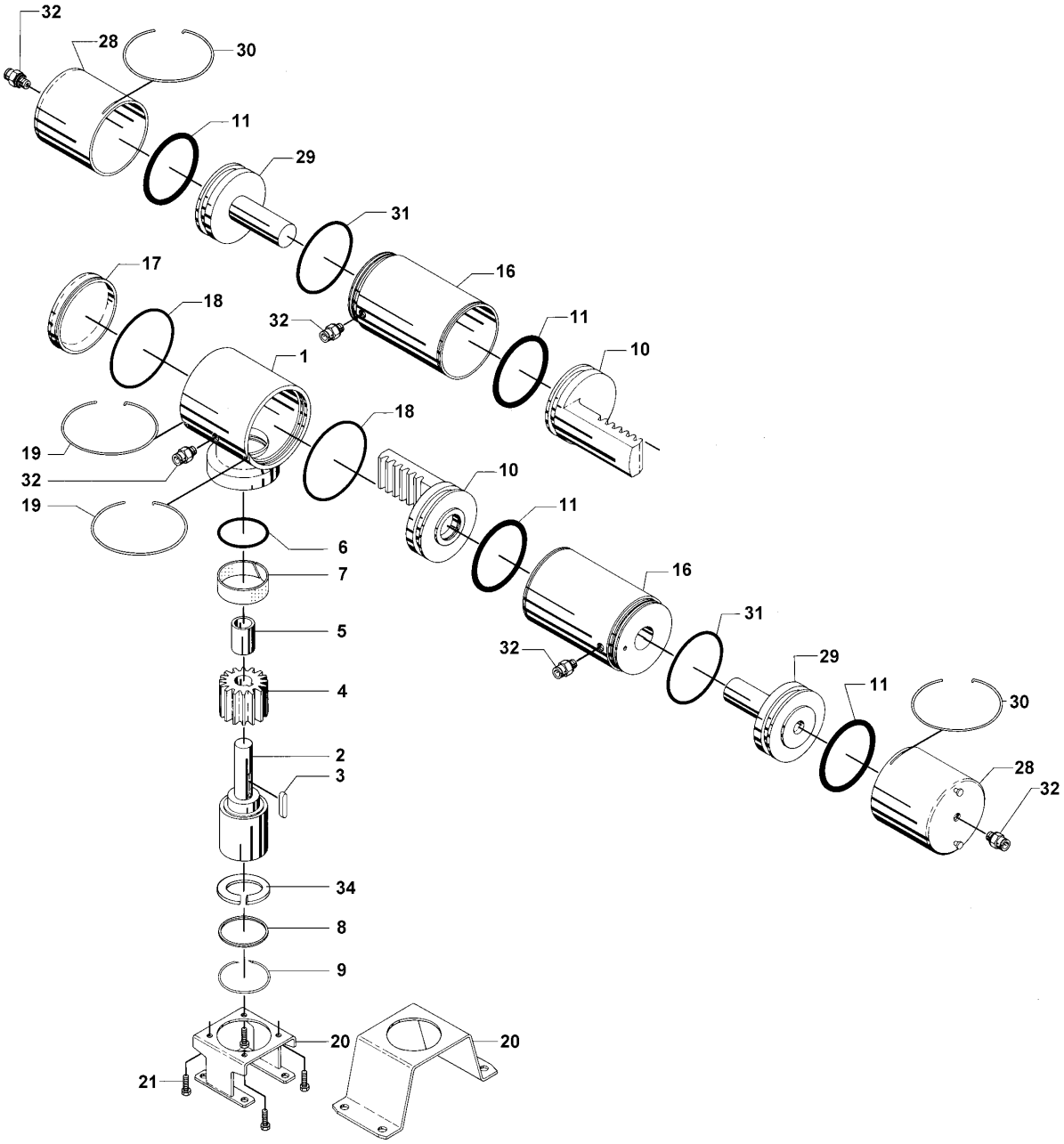

*The drawings and the parts list include all items.*

*The items are identical with the items in the Spare Parts List.*
*When ordering spare parts, please use the Spare Parts List!*

## Parts list
## Actuator type 633



| Item | Quant. | Denomination |
|---|---|---|
| 1 | 1 | Chassis |
| 2 | 1 | Spindle |
| 3 | 1 | Wedge |
| 4 | 1 | Gear wheel |
| 5 | 1 | Bearing |
| 6Δ | 1 | O-ring |
| 7Δ | 1 | Guide ring |
| 8Δ | 1 | Bearing |
| 9 | 1 | Lock ring |
| 10 | 1 | Piston |
| | 2 | Piston (type 631, sizes 80-101.6) |
| | 2 | Piston (type 632, sizes 80-101.6) |
| 11Δ | 1 | O-ring |
| | 2 | O-ring |
| | 3 | O-ring (type 633, sizes 25-76.1) |
| | 4 | O-ring (type 633, sizes 89-101.6) |
| 12 | 1 | Indication stem |
| a | 1 | Indication stem for telescope indication |
| b | 1 | Spring for telescope indication |
| c | 1 | Screw for telescope indication |
| d | 1 | Extension stem for telescope indication |
| 13Δ | 1 | O-ring |
| 14 | 1 | Circlip |
| 15Δ | 1 | O-ring |
| 16 | 1 | Cylinder |
| | 2 | Cylinder (type 630, sizes 63-76.1) |
| | 2 | Cylinder (type 633, sizes 89-101.6) |
| a | 1 | Cylinder for indication |
| 17 | 1 | Cylinder |
| 18Δ | 2 | O-ring |
| 19 | 2 | Lock wire |
| 20 | 1 | Bonnet |
| 21 | 4 | Screw |
| 22 | 1 | Spring (type 630, sizes 25-51) |
| | 2 | Spring (type 630, sizes 63-76) |
| 23 | 1 | Lock wire (type 630, sizes 25-51) |
| | 2 | Lock wire (type 630, sizes 63-76.1) |
| 24 | 1 | Flange |
| 25 | 1 | Flange for indication |
| 26 | 1 | Cylinder lid |
| a | 2 | Screw |
| 27 | 1 | Screw for indication stem |
| 28 | 1 | Auxiliary cylinder (type 633, sizes 25-76.1) |
| | 2 | Auxiliary cylinder (type 633, sizes 89-101.6) |
| 29 | 1 | Auxiliary piston (type 633, sizes 25-76.1) |
| | 2 | Auxiliary piston (type 633, sizes 89-101.6) |
| 30Δ | 1 | O-ring (type 633, sizes 25-76.1) |
| | 2 | O-ring (type 633, sizes 89-101.6) |
| 31 | 1 | Lock wire (type 633, sizes 25-76.1) |
| | 2 | Lock wire (type 633, sizes 89-101.6) |
| 32 | 1 | Air fitting (type 630) |
| | 2 | Air fitting (type 631, 632) |
| | 3 | Air fitting (type 633, sizes 25-76.1) |
| | 5 | Air fitting (type 633, sizes 89-101.6) |
| 33 | 1 | Guide for indication |
| 34 | 1 | Spindle extension (only for size 25) |

Δ : Recommended Spare Parts.

*The drawing below shows KOLTEK actuator.*

*The items refer to the parts list on the opposite part of the page.*

## Drawing



**Type 633**

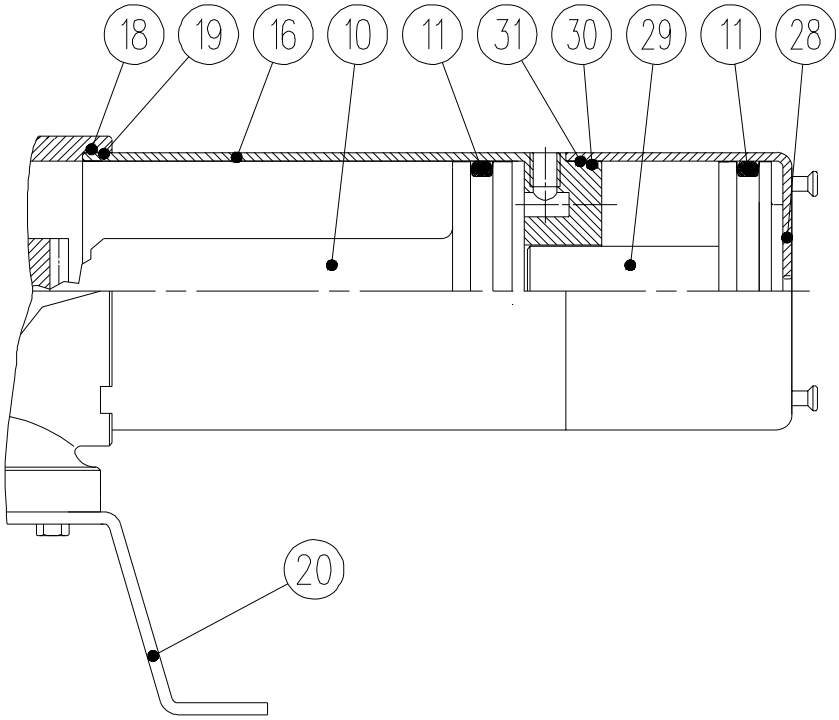


TD 418-071

**How to contact Alfa Laval**

Contact details for all countries are continually updated on our website. Please visit www.alfalaval.com to access the information direct.