SEBR/SEBW Mainstream Strainers Short & Long

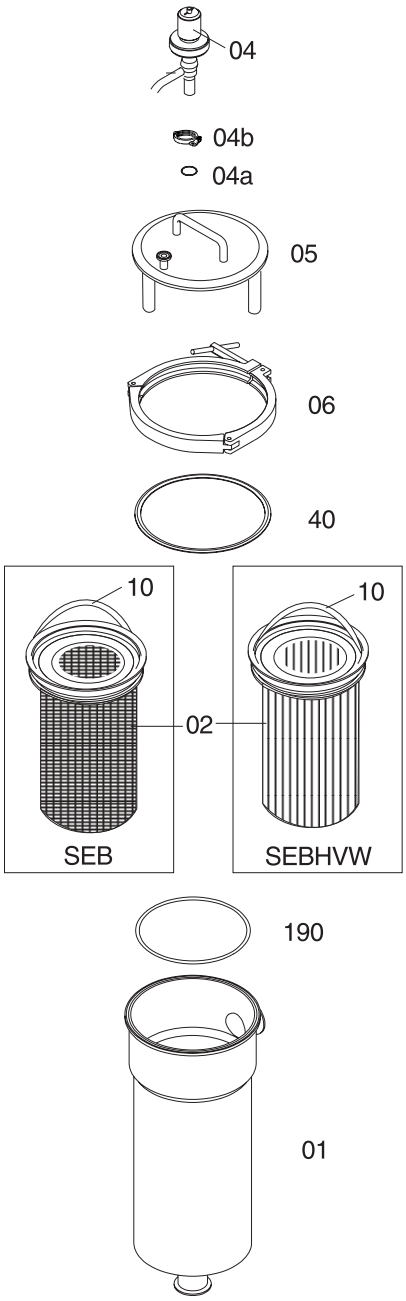

SEB/SEBHVW

SEBR/SEBW Mainstream Strainers Short & Long

Pos.		Qty.	Denomination	2" Short	3" Short	4" Short	2" Long	3" Long	4" Long
04		1	Relief valve	810017	810017	810017	810017	810017	810017
04A	●	1	Gasket BUNA	290272	290272	290272	290272	290272	290272
04A	●	1	Gasket EPDM	290273	290273	290273	290273	290273	290273
04A	●	1	Gasket SFY	290274	290274	290274	290274	290274	290274
04B		1	Clamp	211290	211290	211290	211290	211290	211290
05		1	Cover seb	9634049083	9634049083	221139	9634049083	9634049083	9634049084
05		1	Cover sebw	9634049083	9634049083	9634049084	9634049083	9634049083	9634049084
06		1	Clamp	220314	220314	220314	220314	220314	220314
40	●	1	Gasket BUNA	298559	298559	298559	298559	298559	298559
40	●	1	Gasket EPDM	290176	290176	290176	290176	290176	290176
40	●	1	Gasket SFY	290109	290109	290109	290109	290109	290109
02		1	Screen ring assembly seb: G	221339	221339	221339	9634049417	9634049417	9634049417
02		1	Screen ring assembly seb: E	221335	221335	221335	221377	221377	221377
02		1	Screen ring assembly seb: D	221333	221333	221333	221376	221376	221376
02		1	Basket assembly sebw: A	221002	221002	221002	221022	221022	221022
02		1	Basket assembly sebw: B	N/A	N/A	N/A	221023	221023	221023
02		1	Basket assembly sebw: C	221005	221005	221005	221024	221024	221024
02		1	Basket assembly sebw: D	221016	221016	221016	221025	221025	221025
02		1	Basket assembly sebw: E	221017	221017	221017	221348	221348	221348
02		1	Basket assembly sebw: F	221019	221019	221019	221136	221136	221136
02		1	Basket assembly sebw: H	221021	221021	221021	9634047841	9634047841	9634047841
02		1	Basket assembly sebw: J	221396	221396	221396	221397	221397	221397
02		1	Basket assembly sebw: K	221398	221398	221398	221399	221399	221399
02		1	Basket assembly sebw: L	9634047805	9634047805	9634047805	9634047804	9634047804	9634047804
190	●	1	O-ring BUNA (strainer ring assembly)	751670	751670	751670	751670	751670	751670
190	●	1	O-ring EPDM (strainer ring assembly)	751455	751455	751455	751455	751455	751455
190	●	1	O-ring SFY (strainer ring assembly)	751688	751688	751688	751688	751688	751688
01		1	Strainer body	220947	220964	220203	221097	221098	220094

● included in Service Kits

	2" short	3" short	4" short	2" long	3" long	4" long
● Buna	9613990162	9613990162	9613990162	9613990162	9613990162	9613990162
● EPDM	9613990163	9613990163	9613990163	9613990163	9613990163	9613990163
● SFY	9613990164	9613990164	9613990164	9613990164	9613990164	9613990164